CECOR®

OPERATION MANUAL & PARTS LIST

MODELS:

SP50 HORIZONTAL TANK SERIES

200-600 GALLONS

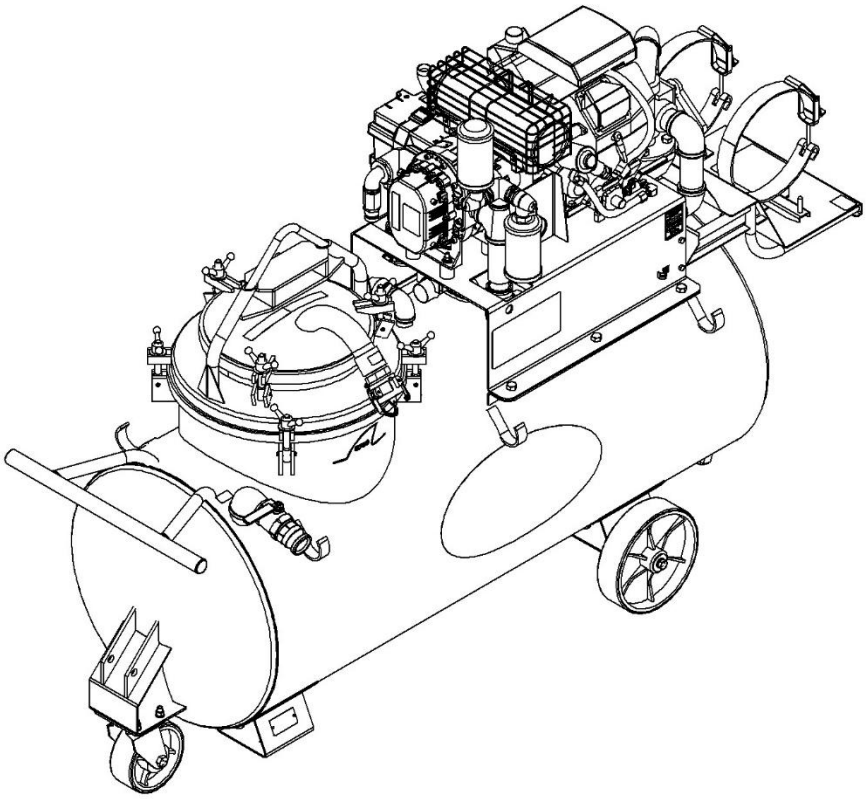

TABLE OF CONTENTS

SECTION 1 – SAFETY INFORMATION 4
1.1 – CAUTION 4
1.2 – PRECAUTIONS 5
SECTION 2 – THE SUMP CLEANER 6
2.1 – UNIT IDENTIFICATION 6
2.2 – MODEL & SERIAL NUMBER 7
2.3 – SUMP CLEANPER FEATURES 8
SECTION 3 – INSTALLATION 9
3.1 – ASSEMBLE DISCHARGE CONNECTION 9
3.2 – LOOSE ITEMS 9
3.3 – INITIAL STARTUP 11
3.3.1 – SELECTOR VALVE 11
3.3.2 – SECURE TANK PORTS 12
3.3.3 – STARTING ENGINE 12
3.3.4 – RUN UNIT IN “SUCTION” 14
3.3.5 – RUN UNIT IN DISCHARGE 15
3.3.6 – SHUTTING ENGINE OFF 15
SECTION 4 – OPERATION 16
4.1 – CLEANING A SUMP 16
4.2 – DISCHARGING FLUID FROM THE SUMP CLEANER 17
4.3 – FILTER 17
4.3.2 – F50 FILTER 18
4.4 – CLEANING THE SUMP CLEANER 22
SECTION 5 – MAINTENANCE 24
5.1 – DAILY MAINTENANCE 24
5.2 – WEEKLY MAINTENANCE 24
5.3 – MONTHLY MAINTENANCE 25
SECTION 6 – TROUBLESHOOTING 26
6.1 – SUCTION 26
6.2 – DISCHARGE 27
6.3 – MUFFLER LEAKING FLUID 27
SECTION 7 – REPAIR PARTS LIST 28

7.1 – WHEELS & CASTER 28
7.1.1 “PTL” PUSH TOW WHEEL TRANSPORT 200 GAL 28
7.1.3 “TW” TOW WHEEL TRANSPORT 300 & 400 GAL 29
7.1.4 “TW” TOW WHEEL TRANSPORT 500 GAL 30
7.2 – SUMP CLEANER 31
7.3 – PUMP ASSEMBLY 34
7.4 – DISPENSER HOSE (STANDARD) 36
7.5 – SUMP CLEANER HOSE 1-1/2” x 16’ (OPTIONAL) 37
7.6 – SUMP CLEANER HOSE 2” x 16’ (STANDARD) 38
7.7 – F50 FILTER (STANDARD) 39
SECTION 8 – WARRANTY 40
SECTION 9 – RECORD MODEL & SERIAL NUMBER 41

SECTION 1 – SAFETY INFORMATION

1.1 – CAUTION

THIS EQUIPMENT IS INTENDED FOR USE WITH STANDARD MACHINE-TOOL COOLANT (WATER-BASE AND CUTTING OILS) ONLY. IT SHOULD NOT BE USED WITH FLAMMABLE FLUIDS (I.E. FUELS, PAINT, SOLVENTS, ETC.), CORROSIVE, TOXIC OR REACTIVE MATERIALS. DO NOT USE IN EXTRA-HIGH TEMPERATURE OR SPARK-HAZARD ENVIRONMENTS (I.E. OVENS WELDING AREAS, ETC.). CLEAN TANK THOROUGHLY ON A FREQUENT BASIS, ESPECIALLY WHEN PUMPING DIFFERENT TYPES OF COOLANT AND SOLIDS OF DIFFERENT MATERIAL. WE RECOMMEND SEPARATE TANK UNITS FOR DIFFERENT SERVICES AND SEGREGATED HANDLING OF DIFFERENT COOLANTS.

- ☐ NO FLAMMABLE FLUIDS/MATERIALS WITH A FLASH POINT UNDER 200°F.
- ☐ NO TOXIC MATERIALS.
- ☐ NO CORROSIVE MATERIALS WITH PH LESS THAN 5 OR GREATER THAN 12.
- ☐ NO REACTIVE MATERIALS.

1.2 – PRECAUTIONS

- ☐ READ THROUGH THE "OPERATIONS MANUAL" COMPLETELY BEFORE ATTEMPTING TO OPERATE THE MACHINE.
- ☐ CLEANOUT, POT LID, INLET CAP AND HOSES MUST BE IN PLACE AND TIGHTLY SECURED BEFORE OPERATION IN THE DISCHARGE MODE.
- ☐ TANK DISCHARGE PRESSURE MUST NOT EXCEED 10 PSI. REGULATOR AND RELIEF VALVES ARE SET BEFORE SHIPMENT AND SHOULD NOT BE CHANGED AS THE USE OF EXCESSIVE PRESSURE COULD CAUSE SERIOUS INJURY OR DAMAGE. OPERATING DISCHARGE PRESSURE IS 6 PSI.
- ☐ DO NOT ATTEMPT TO OPEN POT LID, CLEANOUT OR BLEED-OFF CAP BEFORE RELIEVING PRESSURE IN THE TANK.
- ☐ BLOCK WHEELS OF THE MACHINE TO PREVENT UNINTENTIONAL MOVEMENT.
- ☐ WEAR SAFETY GOGGLES TO PROTECT EYES FROM SPLASHING LIQUIDS.
- ☐ KEEP HANDS AND FINGERS CLEAR OF POT OPENING WHEN REMOVING OR REPLACING FILTER BASKET OR FILTER ASSEMBLY.

SECTION 2 – THE SUMP CLEANER

2.1 – UNIT IDENTIFICATION

WHEN ORDERING PARTS OR ASKING QUESTIONS REGARDING YOUR SUMP SHARK, IT IS IMPORTANT TO HAVE THE MODEL AND SERIAL NUMBER OF THE UNIT. THE MODEL AND SERIAL NUMBER CAN BE FOUND ON THE SHARK'S NAMEPLATE LOCATED ON THE SIDE PANEL OF THE PUMP BASE.

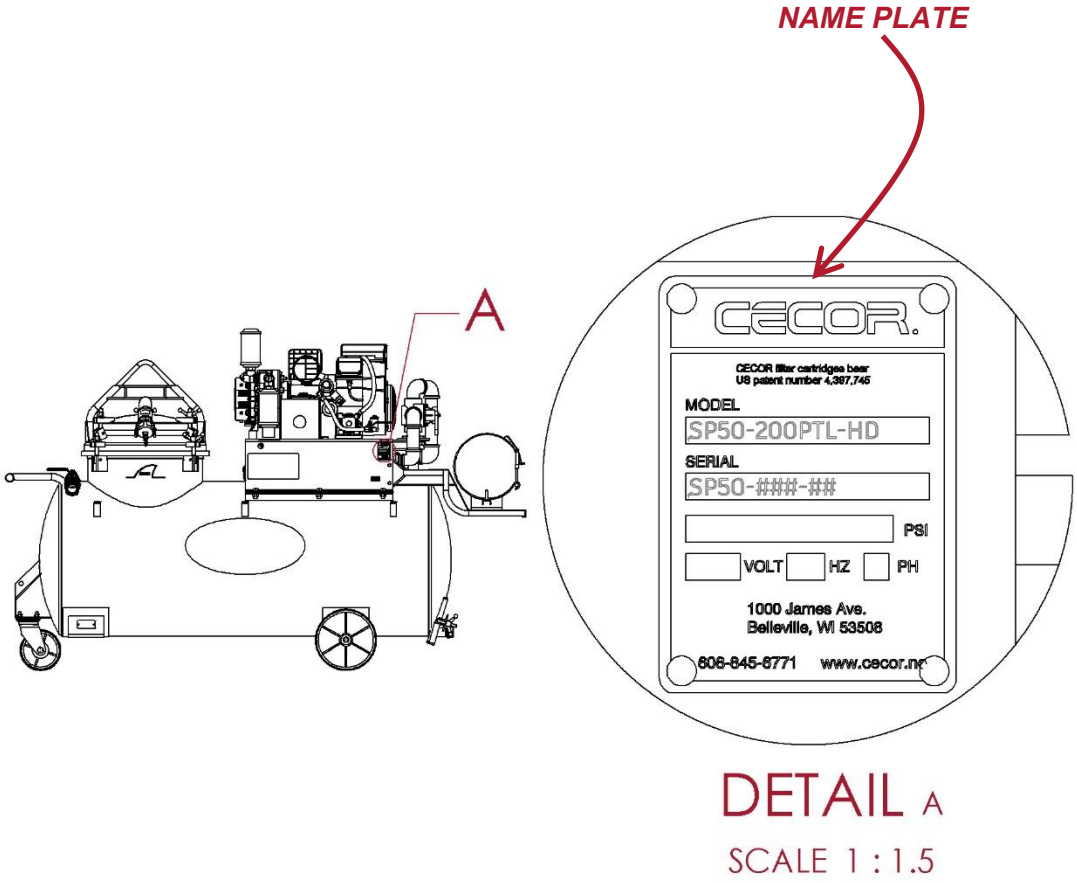

2.2 – MODEL & SERIAL NUMBER

THE MODEL NUMBER IDENTIFIES YOUR SHARK AND INDICATES STANDARD FEATURES ON YOUR MACHINE. THE SERIAL NUMBER IDENTIFIES YOUR SPECIFIC SHARK AND WILL HELP IDENTIFY ANY SPECIAL FEATURES THAT MAY BE UNIQUE TO YOUR SUMP SHARK. THE SERIAL NUMBER IS LOCATED ON THE NAMEPLATE.

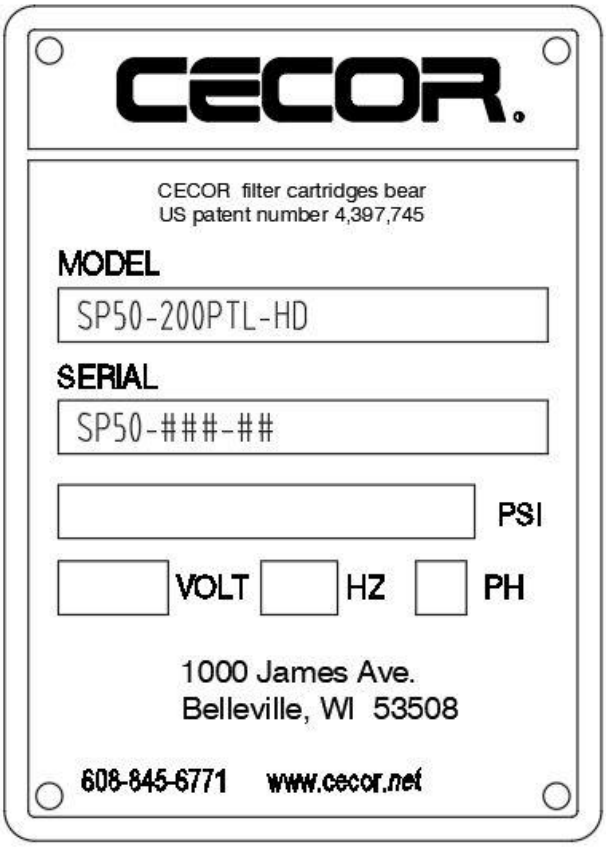

2.3 – SUMP CLEANPER FEATURES

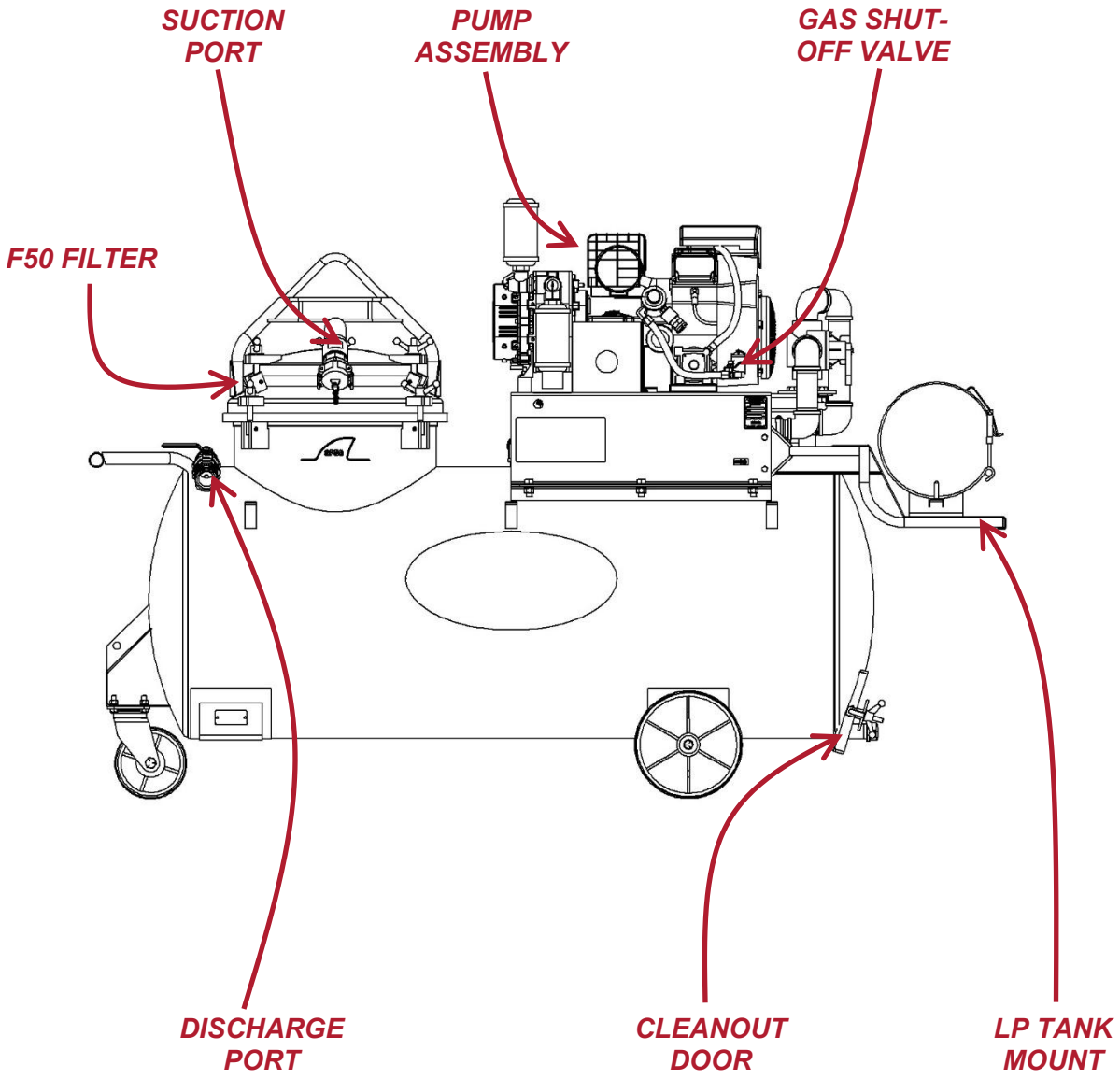

SECTION 3 – INSTALLATION

3.1 – ASSEMBLE DISCHARGE CONNECTION

FOR SHIPPING PURPOSE, INSTALLATION OF THE DISCHARGE VALVE AND QUICK DISCONNECT ADAPTER IS REQUIRED. USE PIPE SEALANT ON ALL JOINTS AND TIGHTEN SECURELY.

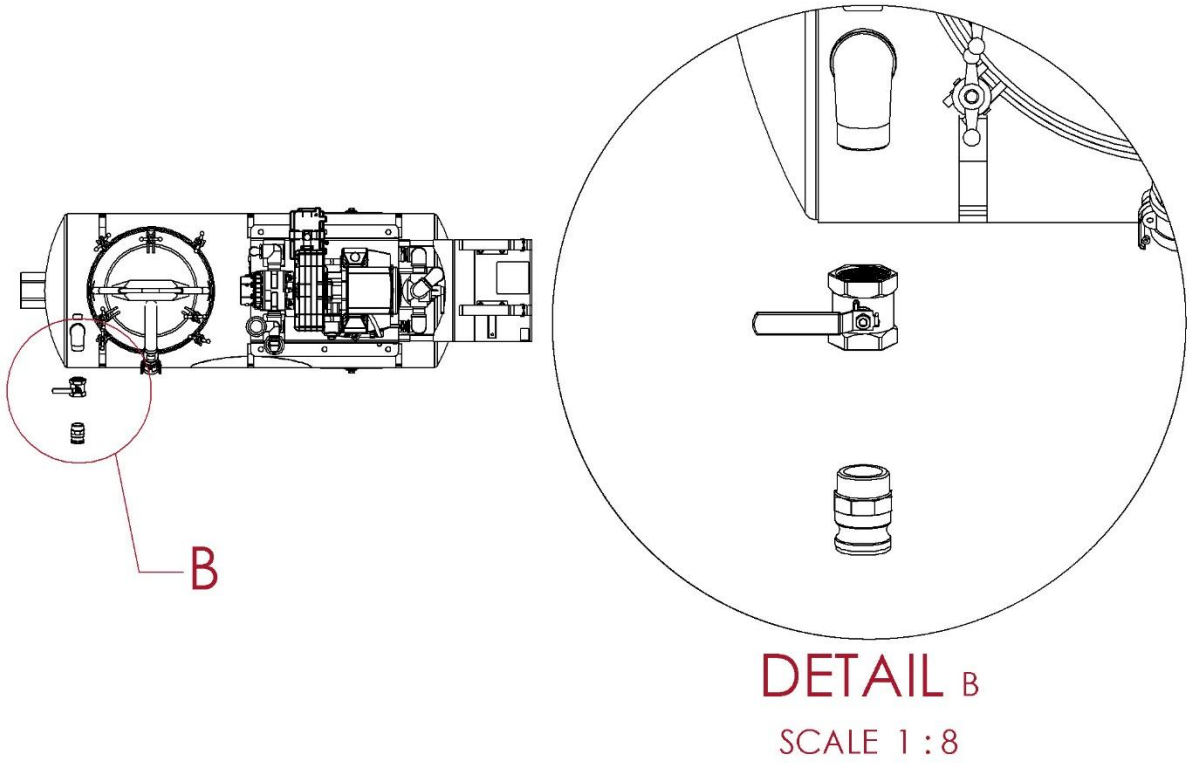

3.2 – LOOSE ITEMS

SOME ITEMS MAY BE PACKAGED IN A BOX LOCATED ON THE SHIPPING PALLET. PACKAGES WITH FILTER BASKET OR FILTER ASSEMBLIES WILL HAVE FILTERS INSTALLED. PLEASE REVIEW YOUR PACKING LIST TO SEE WHAT ADDITIONAL ITEMS YOU WILL BE RECEIVING.

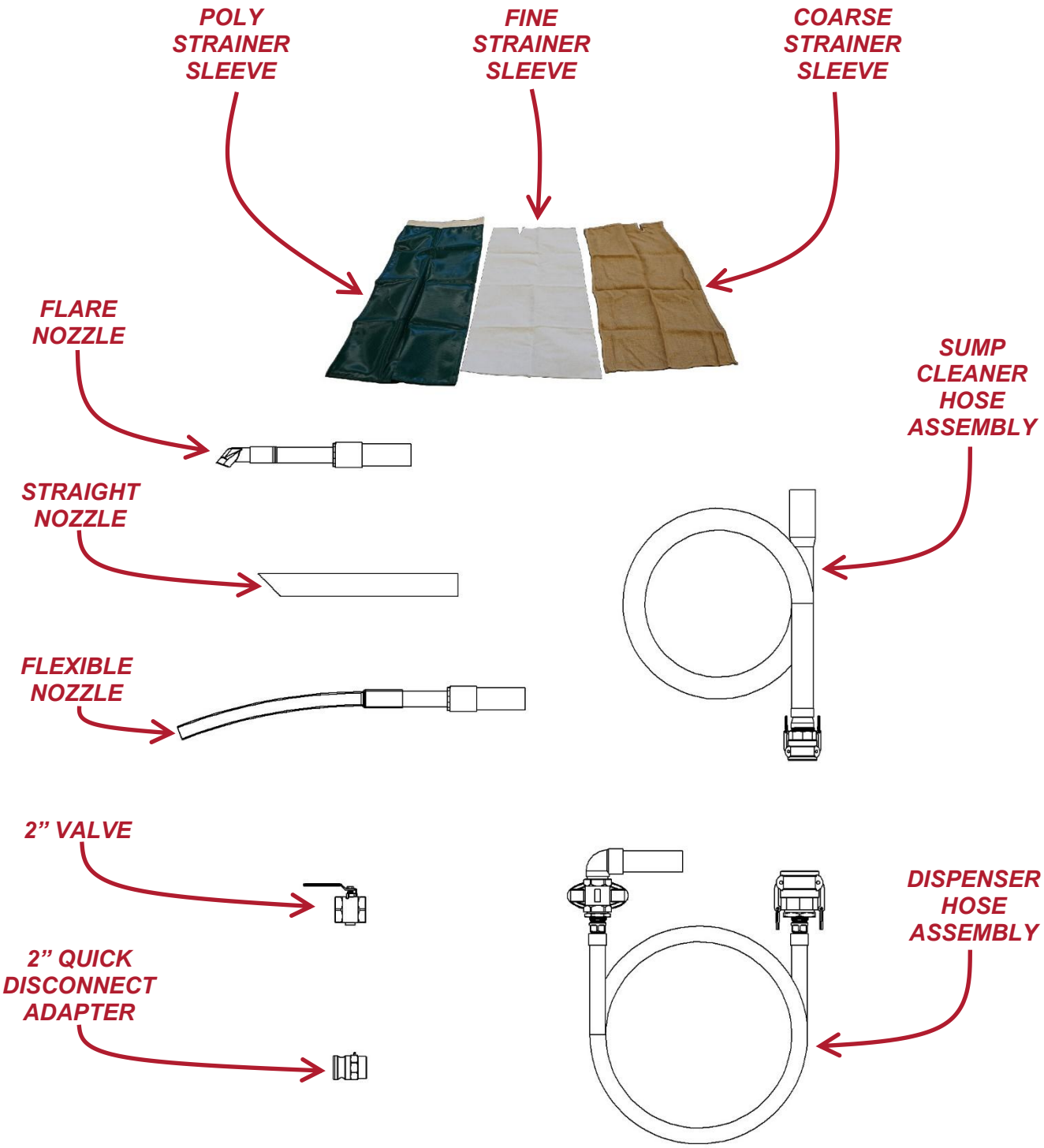
POLY STRAINER SLEEVE
FINE STRAINER SLEEVE
COARSE STRAINER SLEEVE
FLARE NOZZLE
SUMP CLEANER HOSE ASSEMBLY
STRAIGHT NOZZLE
FLEXIBLE NOZZLE
2” VALVE
DISPENSER HOSE ASSEMBLY
2” QUICK DISCONNECT ADAPTER

3.3 – INITIAL STARTUP

1. BEFORE USING THE SUMP CLEANER TO SERVICE SUMPS, RUN THE UNIT IN BOTH “SUCTION” AND “DISCHARGE” MODES.

3.3.1 – SELECTOR VALVE

1. SETTING SELECTOR VALVE TO VENT TANK.

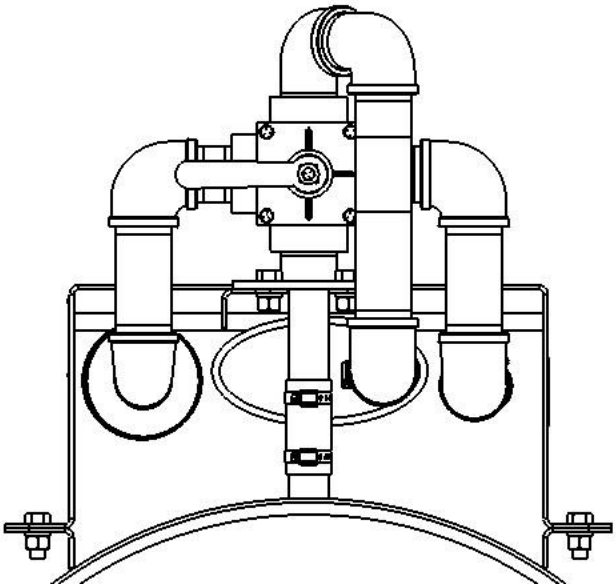

2. SETTING SELECTOR VALVE TO SUCTION.

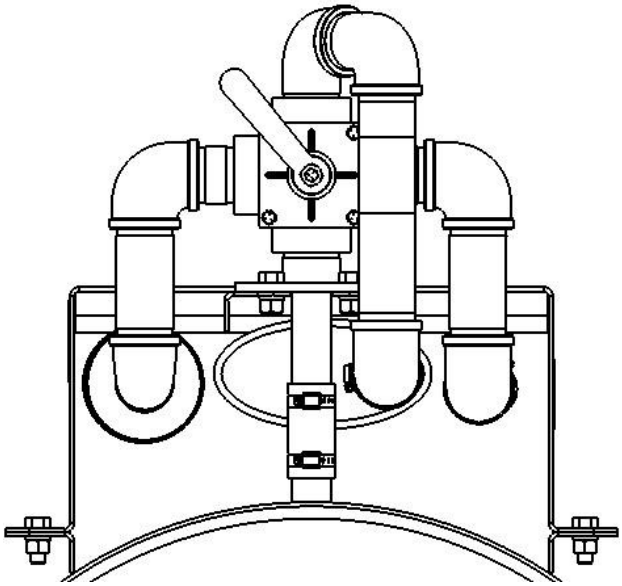

3. SETTING SELECTOR VALVE TO DISCHARGE.

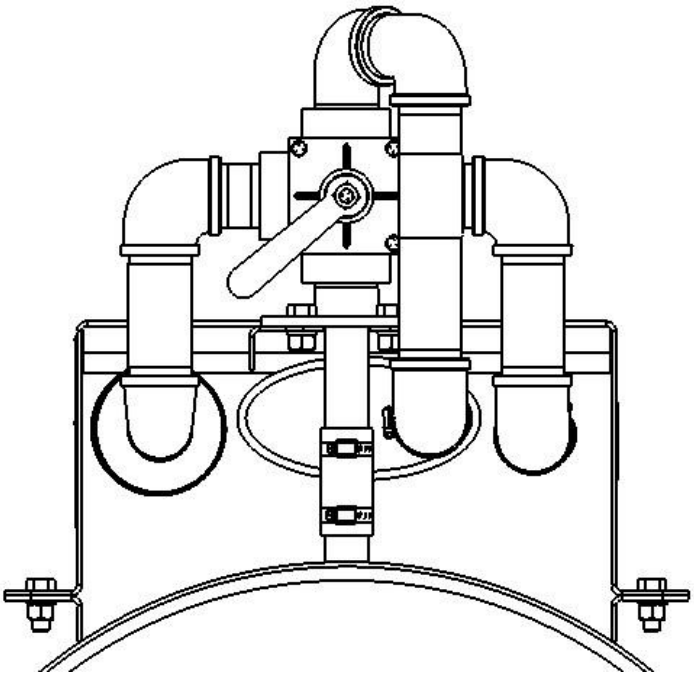

3.3.2 – SECURE TANK PORTS

1. CLOSE AND SECURE ALL PORTS INCLUDING THE POT LID, CLEANOUT DOOR, INTAKE CAP, AND DISCHARGE.

3.3.3 – STARTING ENGINE

1. TURN SELECTOR VALVE TO “VENT” POSITION.
2. OPEN LP TANK VALVE.
3. SET THROTTLE TO HALF AND CHOKE TO FULL

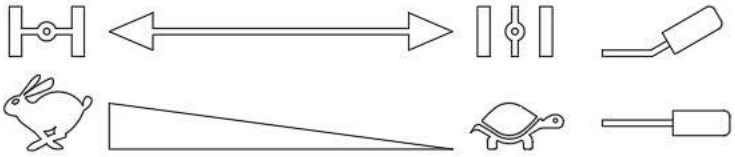

4. OPEN THE GAS VALVE LOCATED ON THE ENGINE.

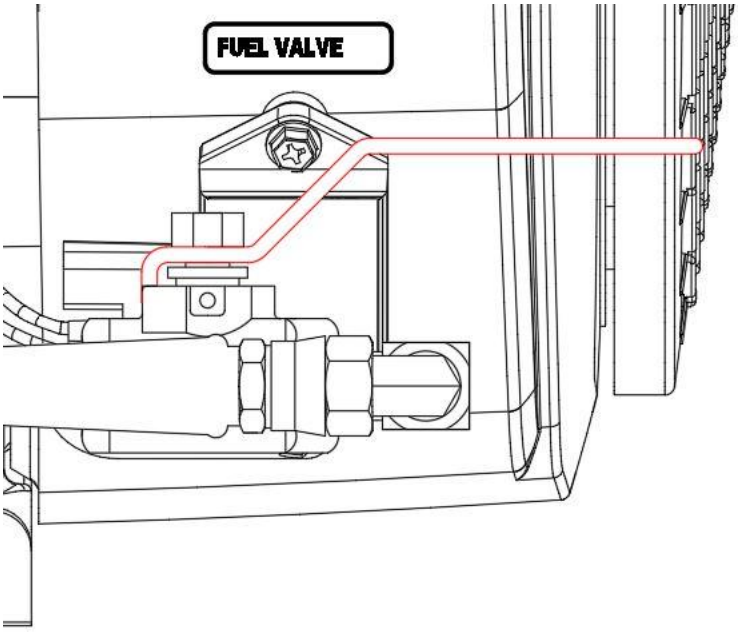

5. START ENGINE USING KEY IN IGNITION.

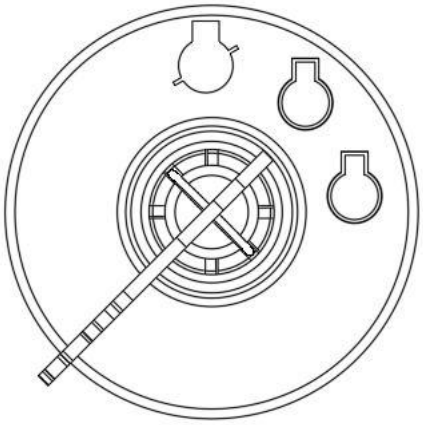

6. ONCE THE ENGINE IS STARTED AND RUNNING, REMOVE THE CHOKE.

3.3.4 – RUN UNIT IN “SUCTION”

1. TURN THE SELECTOR VALVE TO “VENT”.
2. CONNECT SUMP CLEANER HOSE TO INTAKE PIPE.
3. CLOSE DISCHARGE VALVE.
4. TURN THE SELECTOR VALVE TO “SUCTION”. VACUUM READING ON GAUGE LOCATED ON THE CONTROL PANEL WILL DECREASE AND STABILIZE AT 13 inHg.

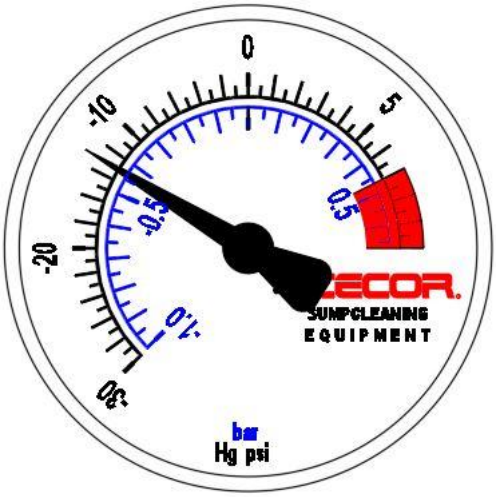

5. TURN THE SELECTOR VALVE TO “VENT” POSITION. PRESSURE WILL DECREASE TO 0 inHg.

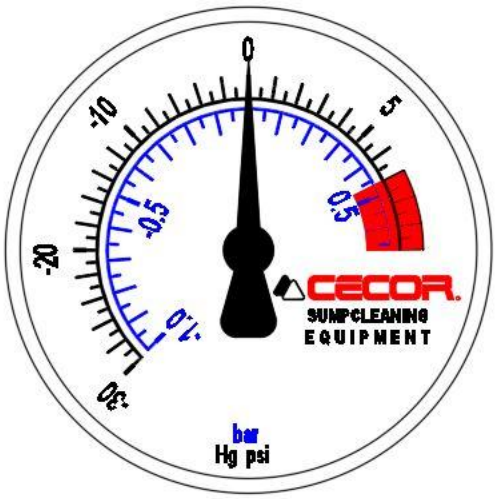

3.3.5 – RUN UNIT IN DISCHARGE

1. TURN THE SELECTOR VALVE TO “VENT”.
2. CONNECT SUMP CLEANER HOSE TO DISCHARGE PIPE.
3. INSTALL CAP TO INTAKE PIPE.
4. TURN THE SELECTOR VALVE TO “DISCHARGE”. VACUUM READING ON GAUGE LOCATED ON THE CONTROL PANEL WILL INCREASE AND STABILIZE AT 6 PSI.

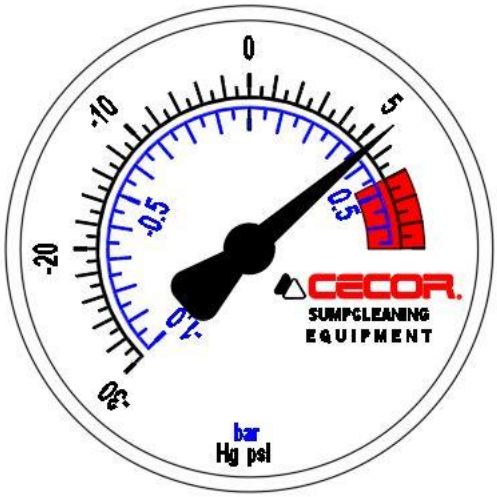

3.3.6 – SHUTTING ENGINE OFF

1. TURN FUEL VALVE TO FULLY CLOSED POSITION, ALOWING ENGINE TO RUN OUT OF FUEL.
2. TURN KEY TO OFF POSITION. **(NOTE: SWITCHING KEY TO OFF POSITION PRIOR TO ALLOWING ENGINE TO RUN OUT OF FUEL MAY CAUSE ENGINE BACKFIRE ON RESTART.)**

SECTION 4 – OPERATION

4.1 – CLEANING A SUMP

1. ATTACH THE SUMP CLEANER HOSE TO THE SUCTION PORT, AND INSERT SUCTION TOOL INTO HOSE END.

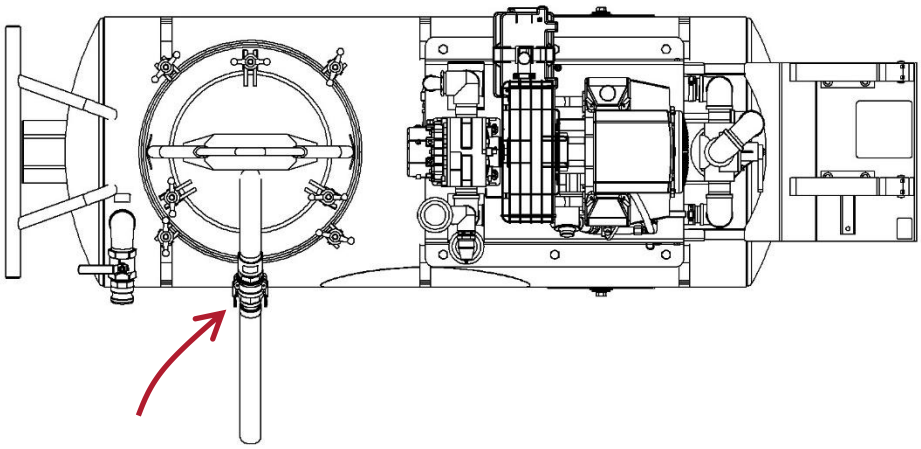

2. RUN UNIT ON SUCTION MODE. (SEE INITIAL STARTUP 3.3.4.)
3. WHEN VACUUMING OUT THE SUMP, ATTACK THE SOLIDS FIRST. POSITION THE SUCTION TOOL IN THE AREAS THAT ARE PRIMARILY SOLIDS. OCCASIONALLY MOVE THE SUCTION TOOL FROM THE SOLID PARTICULATE IN THE SUMP BOTTOM TO A PRIMARILY FLUIDIC AREA. THIS ACTION WILL CLEAR THE HOSE OF SOLIDS REDUCING THE CHANCES OF POSSIBLY PLUGGING THE HOSE.
4. WHEN THE TANK IS FULL, THE FLOAT CONTROL (LOCATED INSIDE THE SUMP CLEANER) WILL CUT OFF SUCTION TO THE PUMP ISOLATING THE PUMP FROM THE TANK (PUMP WILL KEEP RUNNING). WHEN THIS HAPPENS, THE VACUUM READING WILL FALL TO ZERO INDICATING THE TANK NEEDS TO BE EMPTIED.
5. WHEN THE FILTER IS FULL OR BLINDED, THE VACUUM/PRESSURE GAUGE WILL READ 10”$^{+}$ HG, BUT THERE WILL BE NO SUCTION AT THE NOZZLE INDICATING THE FILTER NEEDS TO BE EMPTIED.

4.2 – DISCHARGING FLUID FROM THE SUMP CLEANER

1. ATTACH THE SUMP CLEANER HOSE TO THE DISCHARGE PORT, AND CAP THE SUCTION PORT.

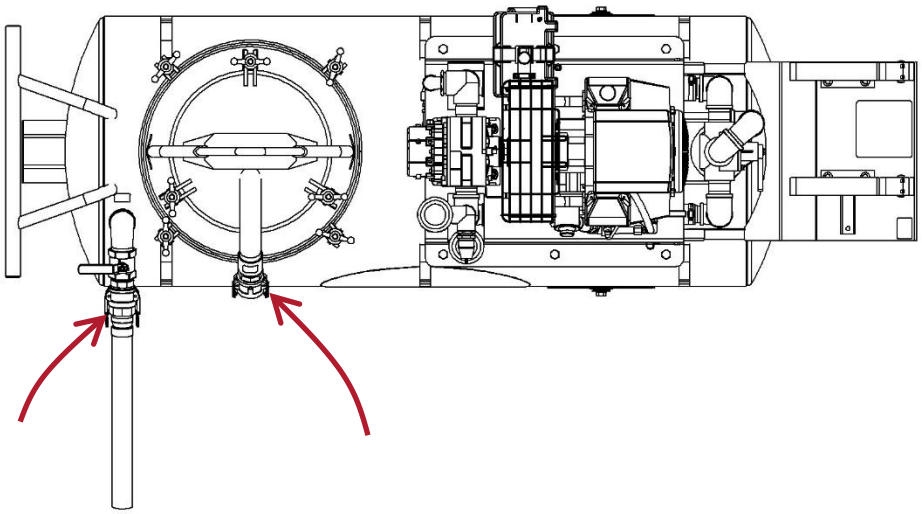

2. RUN UNIT ON DISCHARGE MODE. (SEE INITIAL STARTUP 3.5, STEP 6.)
3. POINT NOZZLE AT THE TARGET WHERE THE FLUID IS TO BE DISPENSED, SLOWLY OPEN DISCHARGE VALVE. SLUGS OF AIR WILL PASS THROUGH HOSE WHEN TANK APPROACHES EMPTY. THESE SLUGS CAN CAUSE ERRATIC FLUID FLOWS, BE PREPARED TO SHUT OF DISCHARGE VALVE WHEN THIS OCCURS.

4.3 – FILTER

1. FILTERING OF THE FLUID IS SPECIFIC TO YOU. SUMP CONDITIONS VARY DUE TO ALL THE VARIABLES THAT OCCUR IN A MACHINE-TOOL SUMP. WE INCLUDE MULTIPLE FILTER BAGS SO YOU CAN FIND WHAT WORKS BEST FOR YOUR APPLICATION. FIRST-CLEANING CAN BE ESPECIALLY DIFFICULT IF IT HAS NOT BEEN DONE ON A REGULAR BASIS. WE SUGGEST STARTING WITH A COARSER BAG. ONCE ON A ROUTINE BASIS, A FINER FILTER CAN BE USED.
2. FILTERS ARE REUSABLE AND WASHABLE IN LUKEWARM WATER.

4.3.2 – F50 FILTER

4.3.2.1 – EMPTYING FILTER

1. FOR BEST RESULTS, DISCHARGE LIQUID FROM SUMP CLEANER AND LET FILTER DRAIN FOR A FEW MINUTES BEFORE DUMPING.
2. LOOSEN THE FOUR WING NUTS ON FILTER ASSEMBLY.

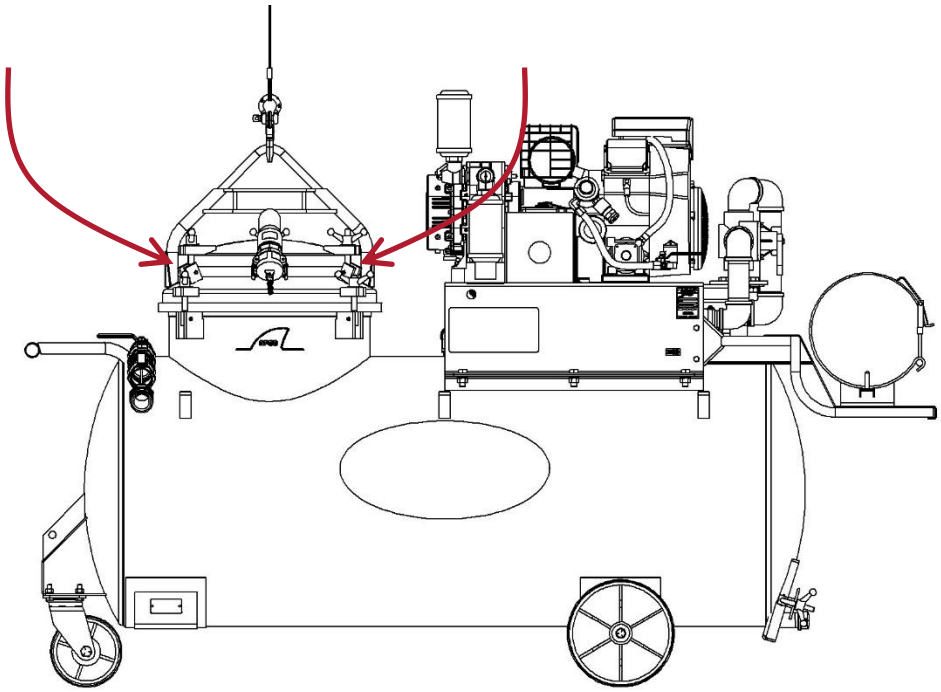

3. LIFT FILTER OUT OF SUMP CLEANER TANK USING HOIST OR FORKLIFT. CAUTION: KEEP HANDS AND FINGERS CLEAR OF POT OPENING IN SUMP CLEANER WHEN REMOVING FILTER!

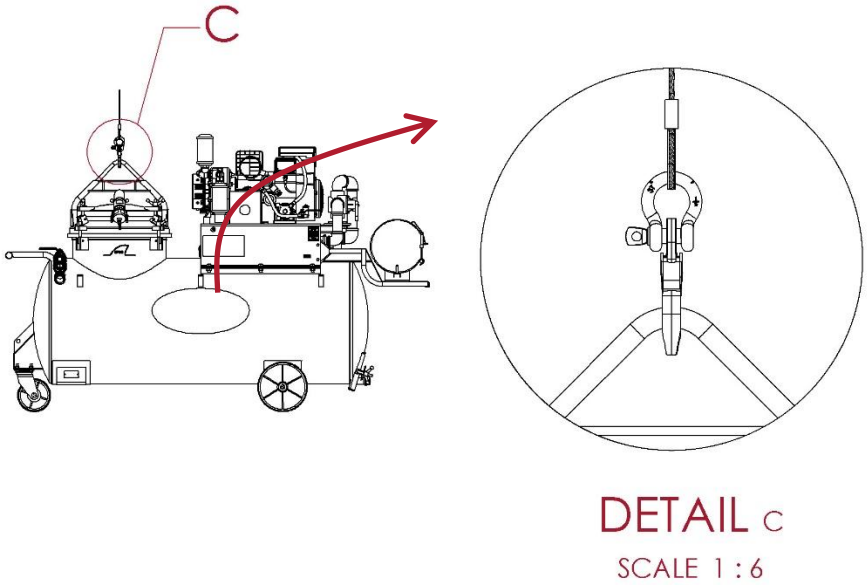

4. POSITION FILTER ABOVE CONTAINER INTO WHICH THE SLUDGE IS TO BE EMPTIED. DISTANCE BETWEEN BOTTOM OF FILTER AND CONTAINER BOTTOM OR “D” DIMENSION, SHOWN IN FIGURE BELOW, AND SHOULD BE APPROXIMATELY 2 TO 3 FEET ON F50 TO PREVENT DAMAGE TO FILTER SLEEVE WHEN DUMPED. DRAINING FILTER BEFORE POSITIONING AND USING A CONTAINER WITH A DRY BOTTOM AND SUITABLE CAPACITY WILL HELP REDUCE POSSIBLE FILTER SPLASH BACK.

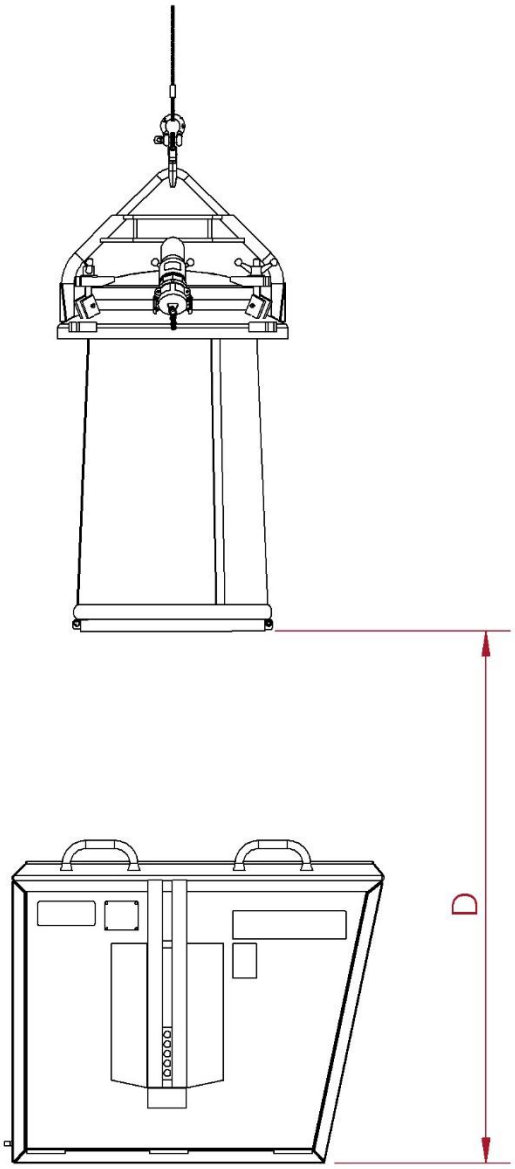

5. ATTACH LANYARD TO TRIGGER ASSEMBLY ON FILTER BOTTOM.

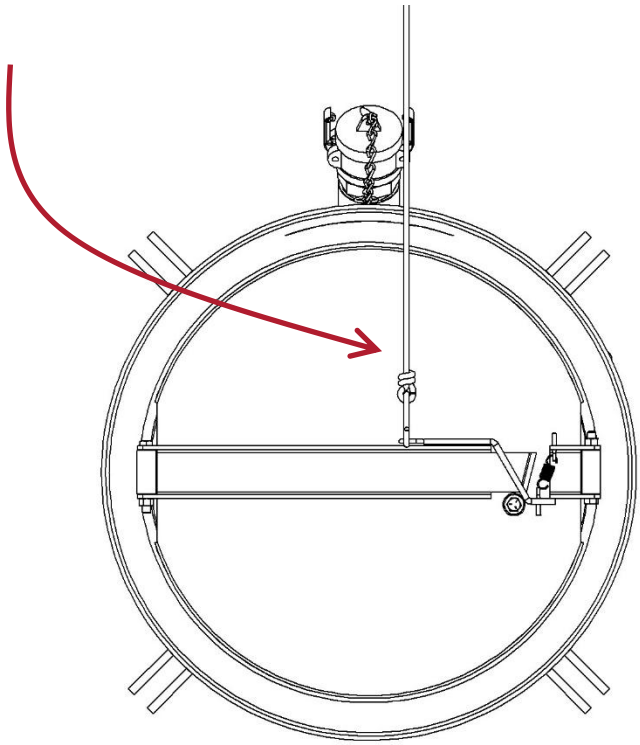

6. MOVE TO A SAFE DISTANCE FROM THE DUMPING ZONE (APPROXIMATELY 7 FEET).
7. PULL LANYARD TO RELEASE LATCH AND BOTTOM DOOR WILL OPEN DUMPING THE FILTER.
8. AFTER FILTER SLEEVE IS EMPTY, ROLL BOTTOM OF SLEEVE UP LOOSELY SO THAT THE BOTTOM END OF SLEEVE WILL BE CLOSED AND CLOSE BOTTOM DOOR.

4.3.2.2 – INSTALLING FILTER

1. LOOSEN THE THREE WING NUTS ON THE FILTER LID AND REMOVE LID.

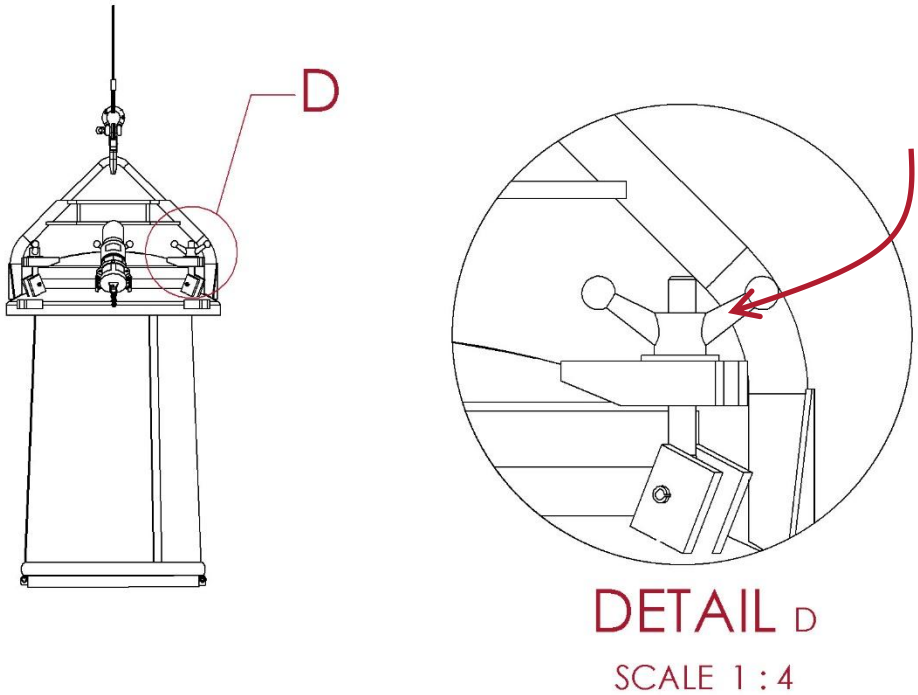

2. PLACE BOTTOM END OF FILTER SLEEVE IN FILTER.
3. FOLD UPPER 1 ½" OF FILTER SLEEVE COLLAR OUT OVER LIP OF FILTER SO THAT THE GASKET IN LID WILL CLAMP IT IN PLACE.
4. REPLACE FILTER LID AND TIGHTEN WING NUTS SECURELY.
5. SUSPEND FILTER FROM HOIST OR FORKLIFT. OPEN FILTER DOOR.
6. PULL BOTTOM END OF FILTER SLEEVE DOWN AND FOLD UP LOOSELY SO THAT BOTTOM END OF SLEEVE WILL BE CLOSED.
7. PLACE FILTER IN SUMP CLEANER AND TIGHTEN THE WING NUTS SECURELY.

4.4 – CLEANING THE SUMP CLEANER

1. GENERALLY, DISCHARGING THE FLUID OUT OF THE SUMP CLEANER IS ALL THAT'S NEEDED. SOME SOLIDS WILL ACCUMULATE IN THE BOTTOM OF THE SUMP AND WILL REQUIRE A COMPLETE CLEANOUT OCCASIONALLY.
2. THE PLT-HD HAS AN EASY TO REMOVE CLEANOUT DOOR AND CAN ACCESSED BY LOOSENING THE TWO WINGNUTS.

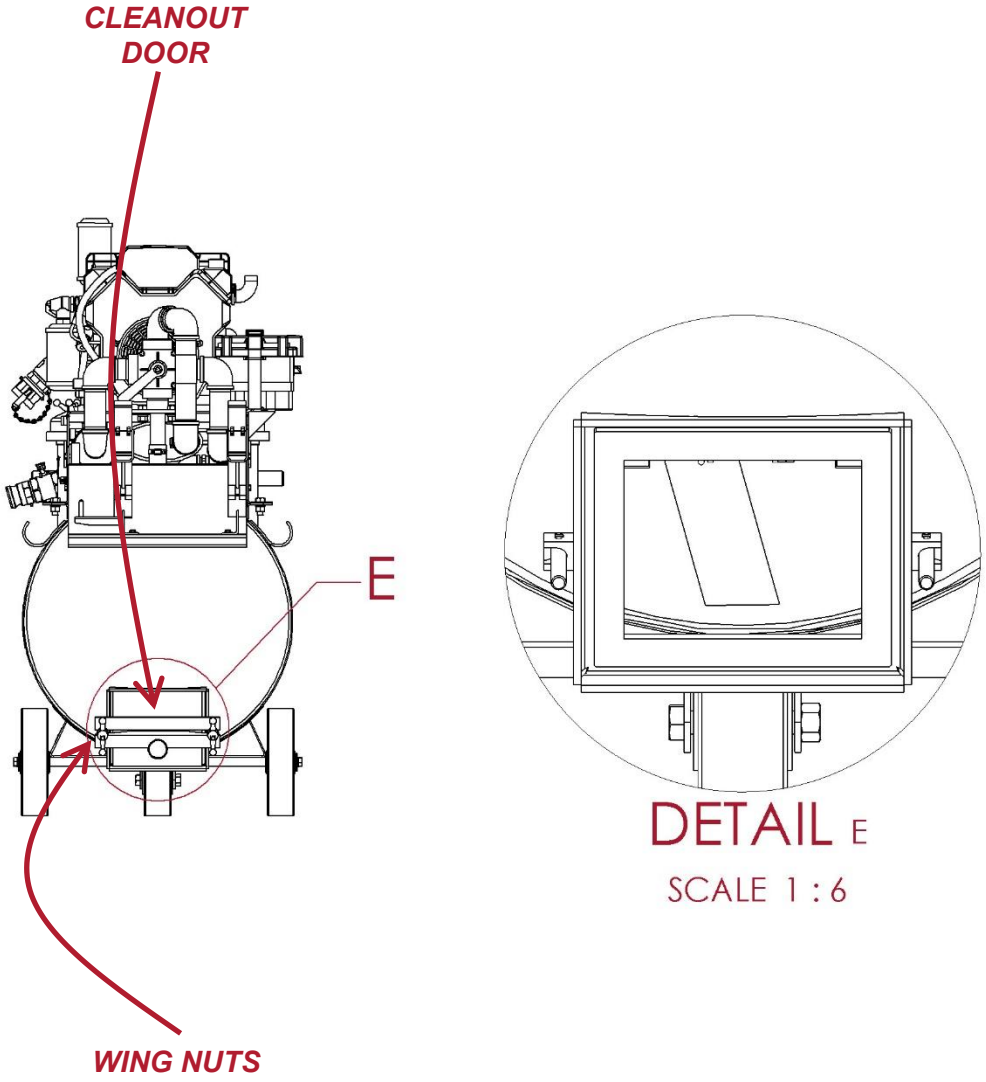

3. THE TW-HD HAS AN EASY TO OPEN CLEANOUT THAT CAN BE ACCESSED BY LOOSENING THE FOUR WINGNUTS.

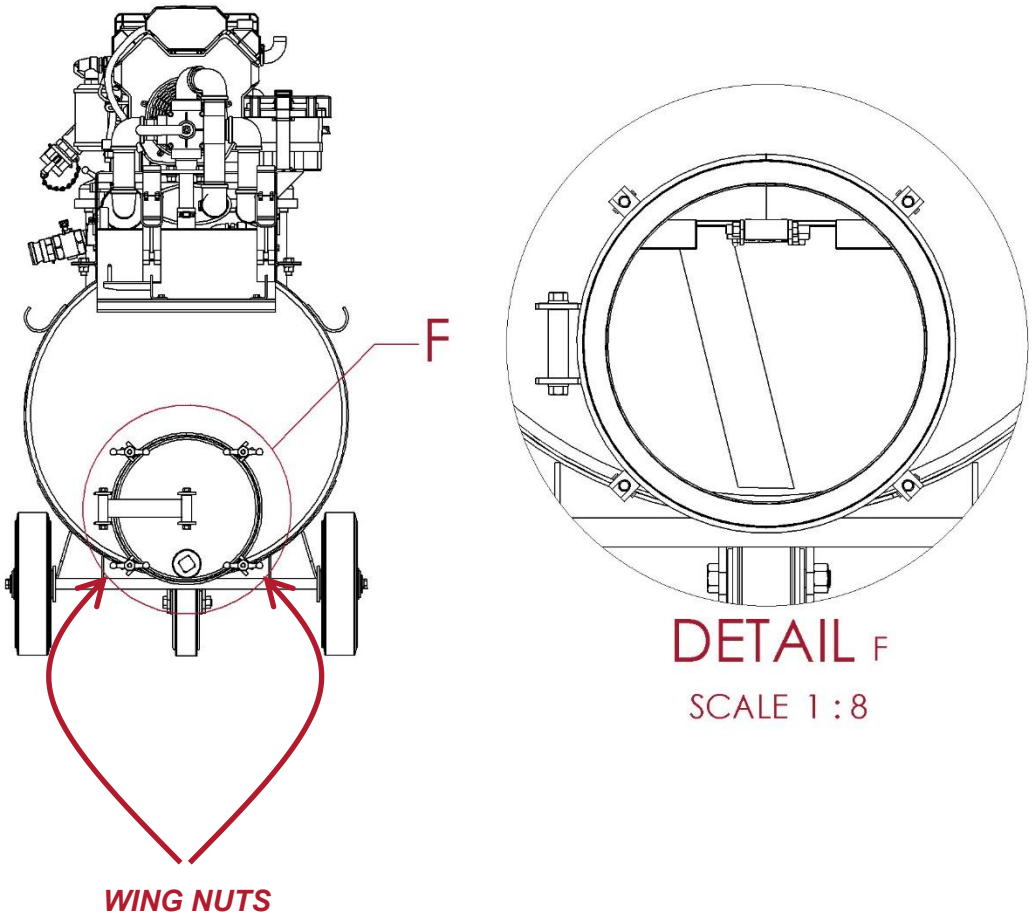

SECTION 5 – MAINTENANCE

TO GET THE HIGHEST PERFORMANCE FROM YOUR SUMP SHARK, IT IS IMPORTANT TO KEEP IT WELL MAINTAINED. BELOW IS A MAINTENANCE GUIDE THAT WILL KEEP YOUR SUMP CLEANER IN TOP-NOTCH, DEPENDABLE CONDITION. ANY WORN OR DAMAGED PART SHOULD BE REPLACED IMMEDIATELY. CECOR STOCKS SUMP CLEANER PARTS AND MOST CAN BE SHIPPED THE SAME OR THE NEXT DAY. CALL 1-800-356-9042 TO ORDER PARTS.

5.1 – DAILY MAINTENANCE

1. CHECK THE VACUUM/PRESSURE GAUGE TO SEE THAT IT IS OPERATING AND READING CORRECTLY. TANK PRESSURE SHOULD NOT EXCEED PRESSURES OF 7 PSI. VACUUM SHOULD NOT EXCEED 13 inHg.
2. DEFECTIVE RELIEF VALVES SHOULD BE REPLACED IMMEDIATELY.
3. CHECK FOR GASKET LEAKS AND ANY TANK DAMAGE.

5.2 – WEEKLY MAINTENANCE

1. INSPECT TANK FOR SLUDGE BUILD UP. CLEAN TANK IF NECESSARY. WITH SOME APPLICATIONS, THE TANK MAY NEED TO BE CLEANED MORE FREQUENTLY. ALWAYS CLEAN THE TANK BETWEEN PUMPING DIFFERENT TYPES OF FLUIDS OR MATERIALS.
2. CLEAN AND INSPECT TANK FLOAT CONTROL. SEE THAT THE FLOAT BALL SEALS AGAINST THE GASKET. THE FLOAT CONTROL ASSEMBLY CAN BE ACCESSED THROUGH THE POT OPENING IN THE SUMP CLEANER.
3. CLEAN THE FILTER BAG BY RINSING IT OUT IN LUKEWARM WATER.
4. OPERATE THE PRESSURE RELIEF HANDLE TO MAKE SURE IT IS WORKING.

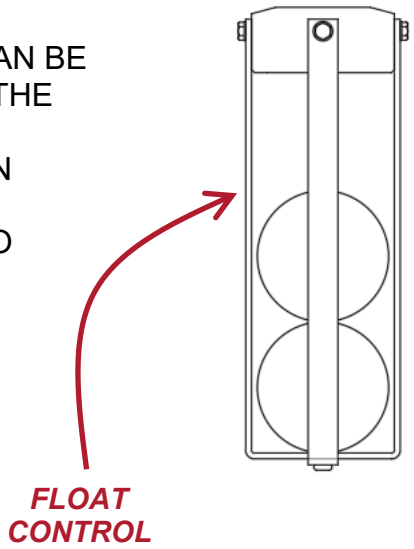

5.3 – MONTHLY MAINTENANCE

1. CHECK FOR WEAR ON POT LID WING NUTS AND STUDS.
2. INSPECT SUMP CLEANER HOSE.
3. GREASE THE SWIVEL CASTER AND WHEELS.

SECTION 6 – TROUBLESHOOTING

6.1 – SUCTION

PROBLEM: THERE IS NO SUCTION WHILE…

1. THE SUCTION PORT IS CAPPED AND DISCHARGE VALVE IS CLOSED
2. THE VACUUM / PRESSURE GAUGE READS "0" SUCTION WITH THE SELECTOR VALVE IN THE SUCTION POSITION
3. **AND** AIR IS COMING OUT OF THE MUFFLER

POSSIBLE CAUSE:	SOLUTION:
TANK IS FULL	DISCHARGE THE FLUID OUT OF THE TANK
THE DISCHARGE VAVLE IS OPEN	CLOSE THE DISCHARGE VALVE AND PROCEED
THE FLOAT CONTROL IS HUNG-UP	CLEAN THE FLOAT CONTROL

PROBLEM: THERE IS NO SUCTION WHILE…

1. THE SUCTION PORT IS CAPPED AND DISCHARGE VALVE IS CLOSED
2. THE VACUUM / PRESSURE GAUGE READS "GREATER THAN 10" WITH THE SELECTOR VALVE IN THE SUCTION POSITION
3. **AND** AIR IS COMING OUT OF THE MUFFLER

POSSIBLE CAUSE:	SOLUTION:
THE FILTER IS FULL OR BLINDED	EMPTY THE FILTER
THE SUCTION HOSE IS PLUGGED	CLEAN OUT THE HOSE

PROBLEM: THERE IS STILL NO SUCTION.

1. RUN UNIT ON "SUCTION" THEN "PRESSURE". IF THE VACUUM / PRESSURE GAUGE READS "0" IN BOTH INSTANCES, THE PROBLEM COULD BE ONE OF THE FOLLOWING:

POSSIBLE CAUSE:	SOLUTION:
THE SELECTOR VALVE	INTERNALLY CLEAN AND LUBRICATE SELECTOR VALVE
THE TANK PORT IS OPEN	RUN THE UNIT ON PRESSURE AND CHECK FOR LEAKS / UNSECURED PORTS

6.2 – DISCHARGE

PROBLEM: UNABLE TO DISCHARGE TANK CONTENTS WHEN…

1. THE SUCTION PORT IS CAPPED AND DISCHARGE VALVE IS CLOSED
2. UNDER PRESSURE, VACUUM / PRESSURE GAUGE READS “6” PSI
3. UNDER VACUUM, VACUUM / PRESSURE GAUGE READS OVER “10” inHg

POSSIBLE CAUSE:	SOLUTION:
THE TANK DISCHARGE VALVE IS CLOSED	OPEN THE DISCHARGE VALVE
THE DISCHARGE HOSE IS PLUGGED	UNPLUG THE HOSE BY BENDING THE HOSE IN THE PLUG AREA WHILE THE SUMPCLEANER IS UNDER VACUUM
DISCHARGE HOSE IS KINKED	REPLACE THE HOSE
DISCHARGE PIPE IS PLUGGED	CLEANOUT TANK

PROBLEM: UNABLE TO DISCHARGE TANK CONTENTS WHEN…

1. THE SUCTION PORT IS CAPPED AND DISCHARGE VALVE IS CLOSED
2. UNDER PRESSURE, VACUUM / PRESSURE GAUGE READS “0” PSI
3. UNDER VACUUM, VACUUM / PRESSURE GAUGE READS OVER “10” inHg

POSSIBLE CAUSE:	SOLUTION:
THE PRESSURE RELIEF VALVE MAY HAVE FAILED. SHOULD NOT FLOW OUT OF THE RELIEF AT PRESSURES UNDER 6 PSI	REPLACE RELIEF VALVE
WORN GASKET	REPLACE WORN GASKET

PROBLEM: STILL UNABLE TO DISCHARGE.

1. RUN UNIT ON “SUCTION” THEN “PRESSURE”. IF THE VACUUM / PRESSURE GAUGE READS “0” IN BOTH INSTANCES, THE PROBLEM COULD BE ONE OF THE FOLLOWING:

POSSIBLE CAUSE:	SOLUTION:
THE SELECTOR VALVE	INTERNALLY CLEAN AND LUBRICATE SELECTOR VALVE
THE TANK PORT IS OPEN	RUN THE UNIT ON PRESSURE AND CHECK FOR LEAKS / UNSECURED PORTS

6.3 – MUFFLER LEAKING FLUID

PROBLEM: FLUID IS COMING OUT OF THE MUFFLER

POSSIBLE CAUSE:	SOLUTION:
FLOAT CONTROL IS ALLOWING FLUID TO BYPASS	INSPECT FLOAT CONTROL. CLEAN OR REPLACE
EXCESSIVE COOLANT FOAMING	CONSULT COOLANT SUPPLIER
EXCESSIVE TURBULANCE IN THE TANK	CHECK TO SEE IF AIR IS BEING SUCKED INTO THE DISCHARGE PIPE
QUICKLY SWITCHING THE SELECTOR VALVE FORM “SUCTION” TO “DISCHARGE” THEN BACK WHEN TANK IS FULL	ALLOW TANK TO STABILIZE IN ONE MODE OF OPERATION BEFORE SWITCHING TO ANOTHER MODE OF OPERATION

SECTION 7 – REPAIR PARTS LIST

7.1 – WHEELS & CASTER

7.1.1 “PTL” PUSH TOW WHEEL TRANSPORT 200 GAL

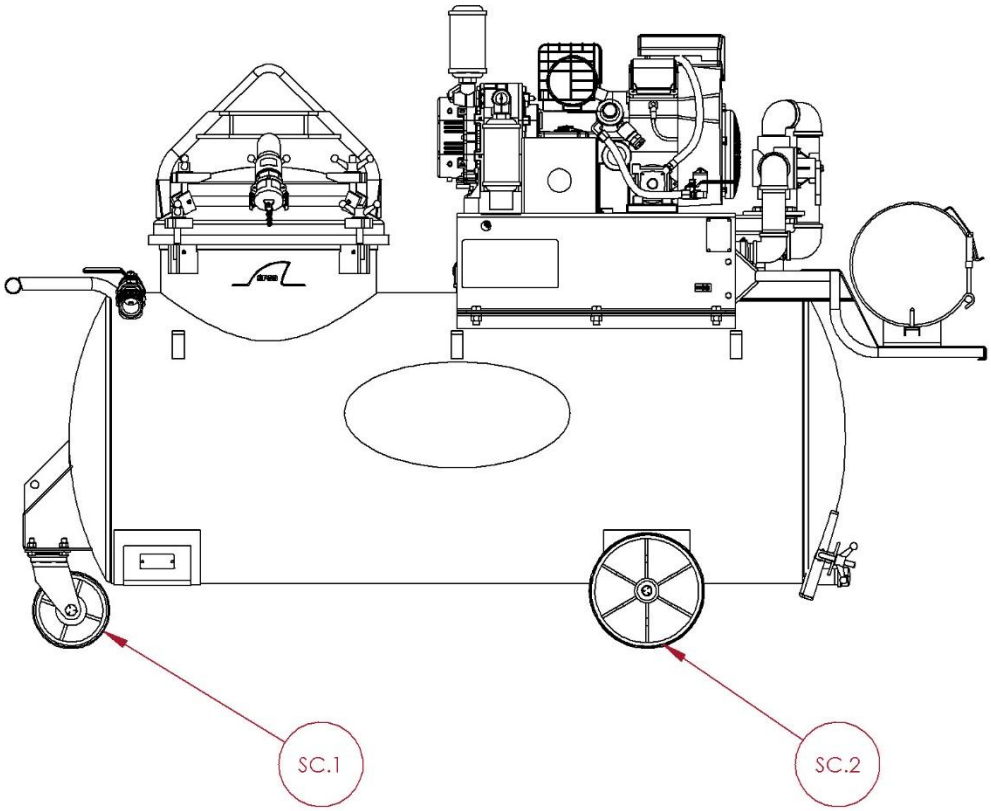

REF	PART NUMBER	DESCRIPTION
SC.1	PCST.SWIV.0803.0000	CASTER - POLY SWIVEL 8" x 3"
SC.2	PCST.WHEL.1201.0KIT	WHEEL - POLY 12" x 3"

7.1.3 “TW” TOW WHEEL TRANSPORT 300 & 400 GAL

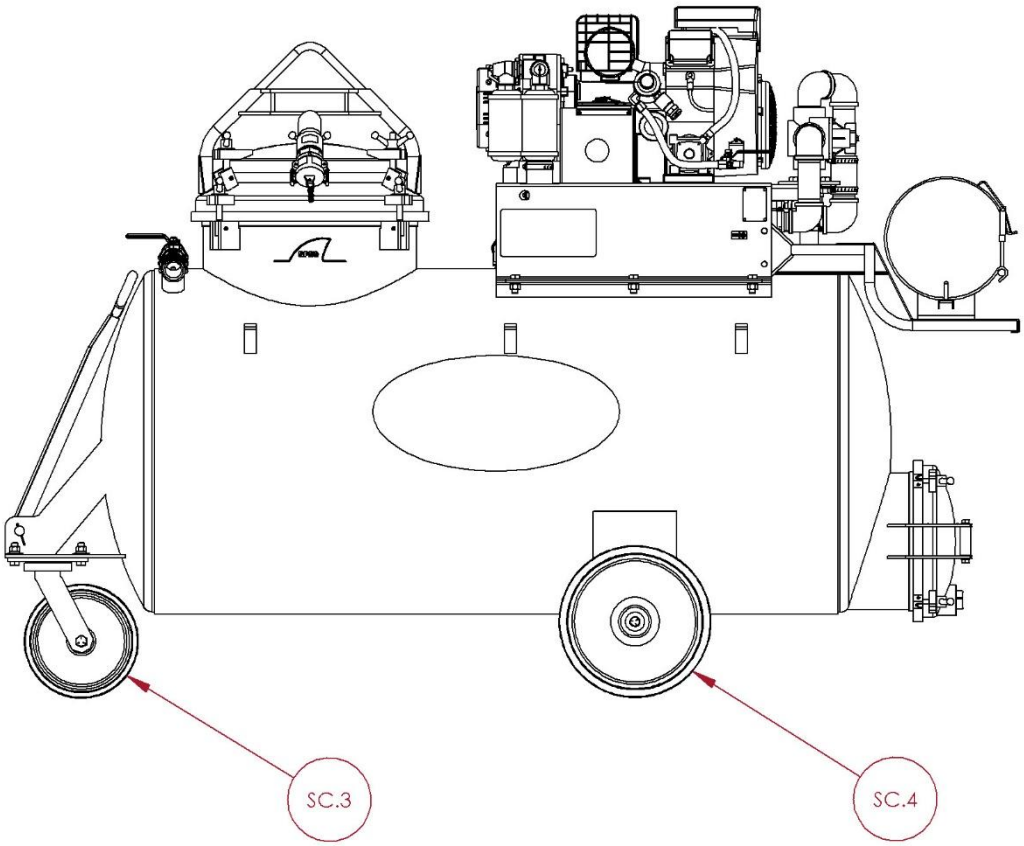

REF	PART NUMBER	DESCRIPTION
SC.3	PCST.SWIV.1203.0000	CASTER - RUBBER TIRE SWIVEL 12" x 3"
SC.4	PCST.WHEL.1602.0000	WHEEL - 16" x 4" RUBBER TIRE

7.1.4 “TW” TOW WHEEL TRANSPORT 500 GAL

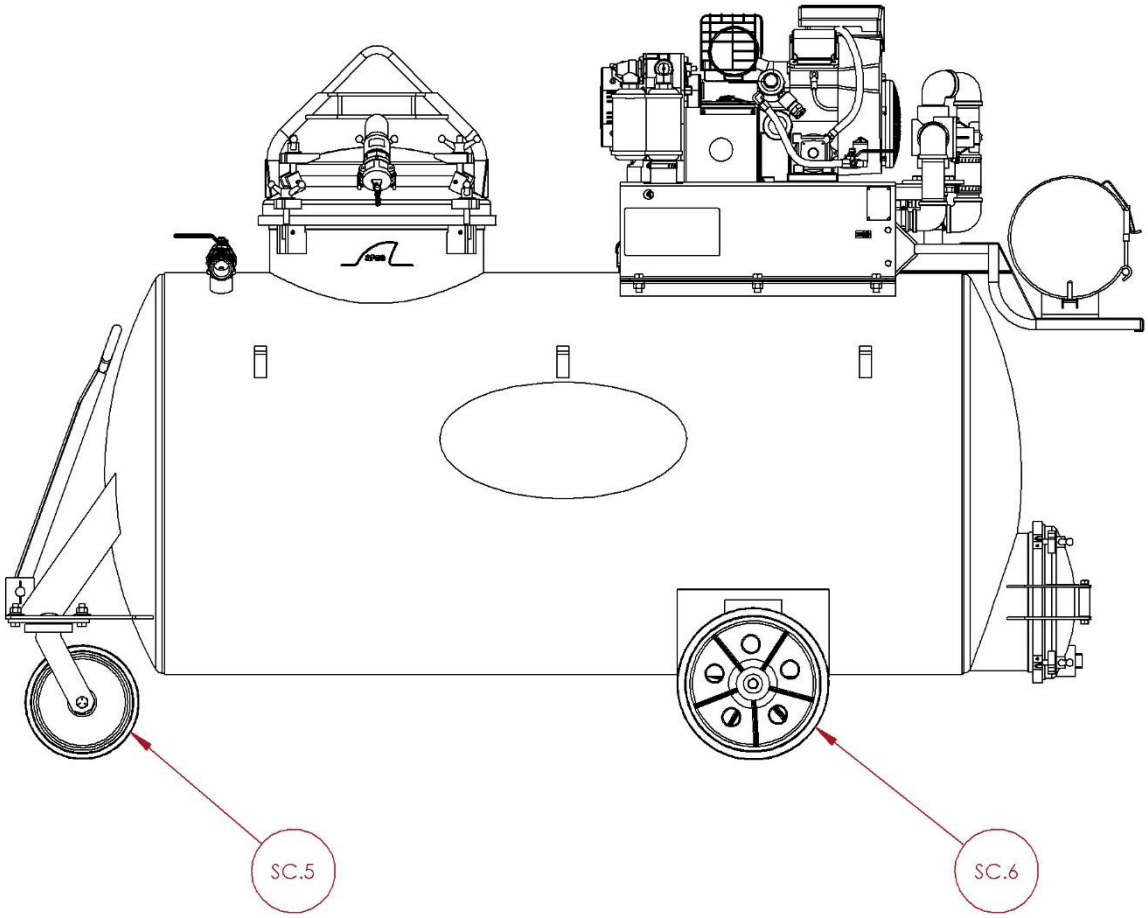

REF	PART NUMBER	DESCRIPTION
SC.5	PCST.SWIV.1203.0000	CASTER - RUBBER TIRE SWIVEL 12" x 3"
SC.6	PCST.WHEL.1603.0000	WHEEL - 16" x 5" RUBBER TIRE

7.2 – SUMP CLEANER

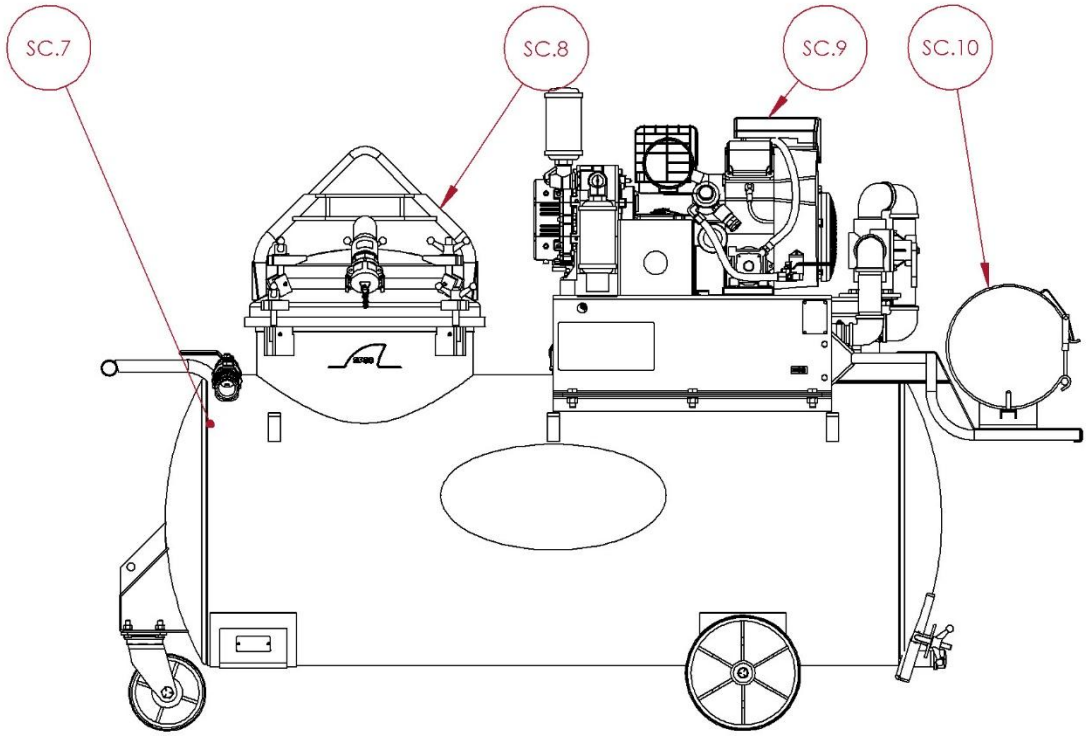

REF	PART NUMBER	DESCRIPTION
SC.7	CALL FOR INFO	TANK ASSEMBLY
SC.8	F50 UNIVERSAL	F50 FILTER ASSEMBLY
SC.9	SP50-HD	SP50-HD PUMP ASSEMBLY
SC.10	ASC0.0126	LP TANK BRACKET

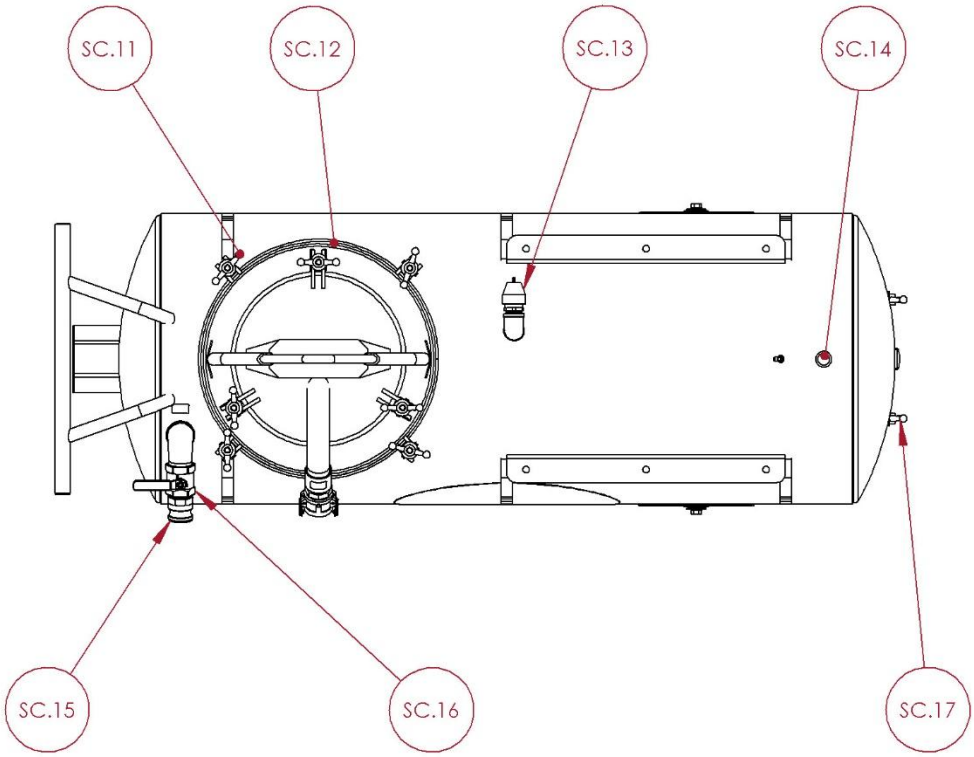

REF	PART NUMBER	DESCRIPTION
SC.11	ADT0.0107	GASKET - 24" DIA
SC.12	HN0Z.0625.1100.WING	NUT - WING 5/8"-11
SC.13	PVAL.RELF.0007.0000	RELIEF VALVE 1-1/4"
SC.14	ASC0.0001	FLOAT CONTROL (2 BALLS) 1¼"
SC.15	PPLM.0000.0031.0000	DISCONNECT ADAPTER - 2" - MALE
SC.16	PVAL.BTFY.0005.0000	VALVE - BUTTERFLY 2"
SC.17	HN0Z.0500.1300.WING	WING NUT ½-13

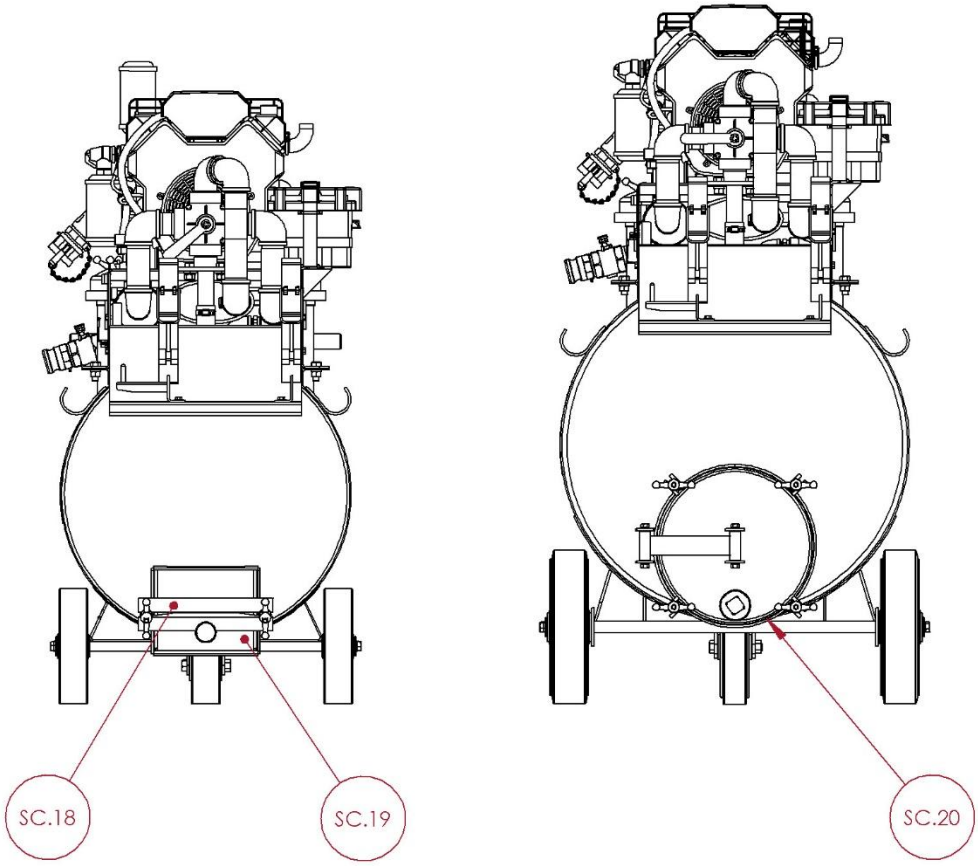

REF	PART NUMBER	DESCRIPTION
SC.18	ASC0.0043	RECTANGULAR CLEANOUT DOOR
SC.19	ADT0.0010	GASKET - RECTANGULAR
SC.20	ADT0.0016	GASKET - 16" DIA

7.3 – PUMP ASSEMBLY

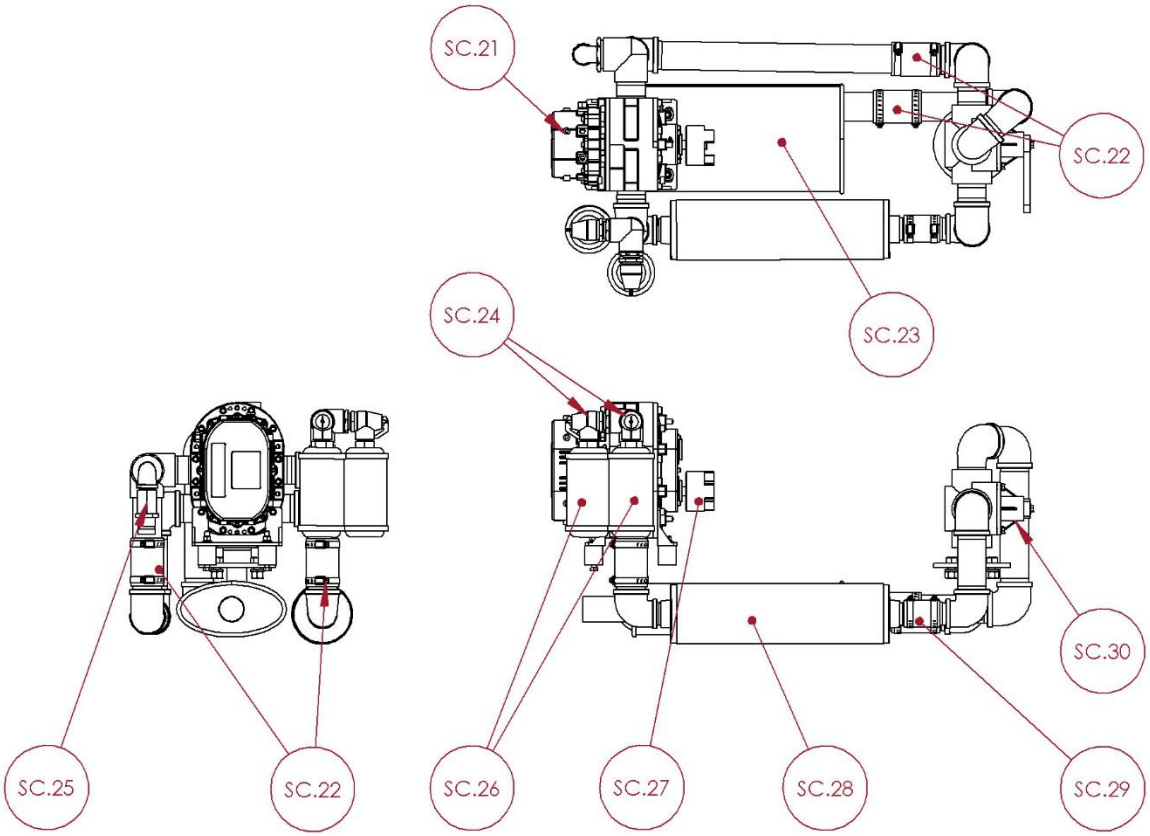

REF	PART NUMBER	DESCRIPTION
SC.21	PMOT.PUMP.0007.0000	VACUUM PUMP
SC.22	ASC0.0049	FLEXIBLE COUPLING ASSEMBLY
SC.23	PPLM.0000.0039.0000	MUFFLER, 2”
SC.24	PVAL.RELF.0006.0000	PRESSURE RELIEF VALVE, 1”, 6 PSI
SC.25	PVAL.RELF.0008.0000	VACUUM RELIEF VALVE, 1”
SC.26	PPLM.0000.0040.0000	MUFFLER, 1”
SC.27	PMOT.ACCE.0016.0000	FELXIBLE COUPLING BODY, 3/4” BORE
SC.28	PPLM.0000.0065.0000	MUFFLER, 1-1/2”
SC.29	ASC0.0292	FLEXIBLE COUPLING ASSEMBLY
SC.30	PVAL.4WAY.0001.0000	4-WAY SELECTOR VALVE

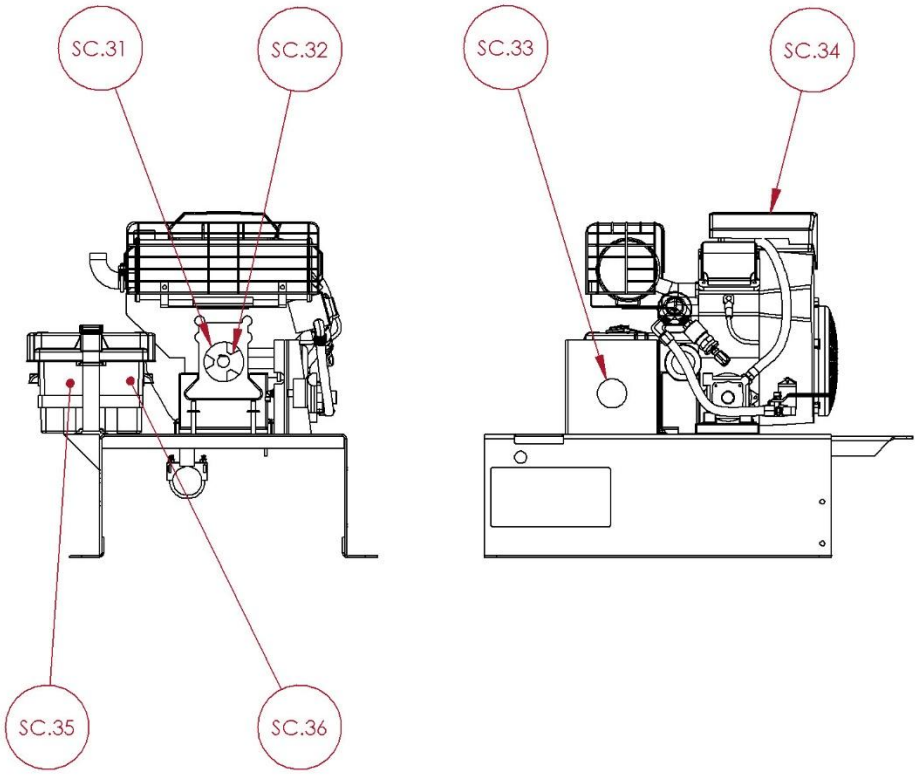

REF	PART NUMBER	DESCRIPTION
SC.31	PMOT.ACCE.0035.0000	FLEXIBLE COUPLING SPIDER
SC.32	PMOT.ACCE.0051.0000	FLEXIBLE COUPLING BODY, 1” BORE
SC.33	PMOT.MOEN.0037.0KIT	KOHLER ENGINE
SC.34	PPLM.0000.0012.0000	VACUUM/PRESSURE GAUGE
SC.35	PELE.MIS0.0052.0000	BATTERY BOX
SC.36	PELE.MIS0.0053.0000	12V BATTERY

7.4 – DISPENSER HOSE (STANDARD)

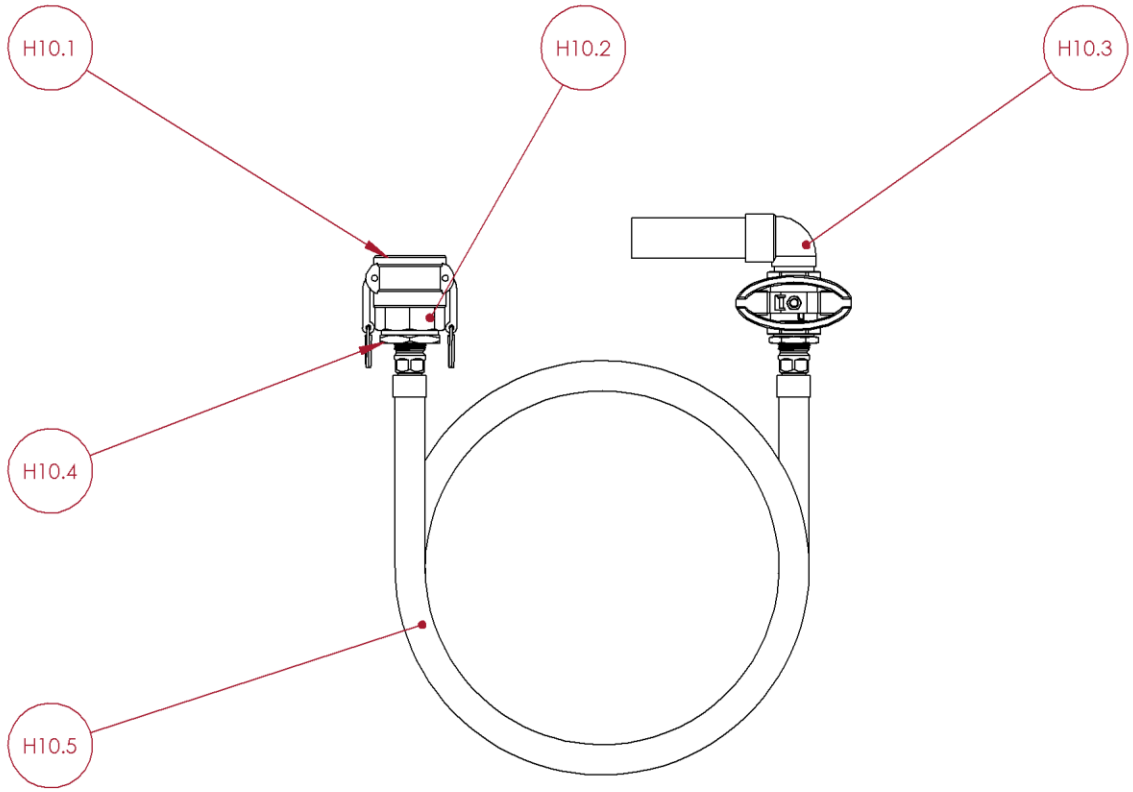

REF	PART NUMBER	DESCRIPTION
H10.1	PPLM.0000.0016.0000	QUICK DISCONNECT COUPLER
H10.2	PGAS.0000.0003.0200	COUPLER GASKET
H10.3	ASC0.0064	NOZZLE - VALVE ASSEMBLY 1"
H10.4	FBG0.2000.1000.0000	BUSHING - REDUCER
H10.5	ASC0.0028	HOSE ASSEMBLY - 1" x 16' - DISPENSER

7.5 – SUMP CLEANER HOSE 1-1/2” x 16’ (OPTIONAL)

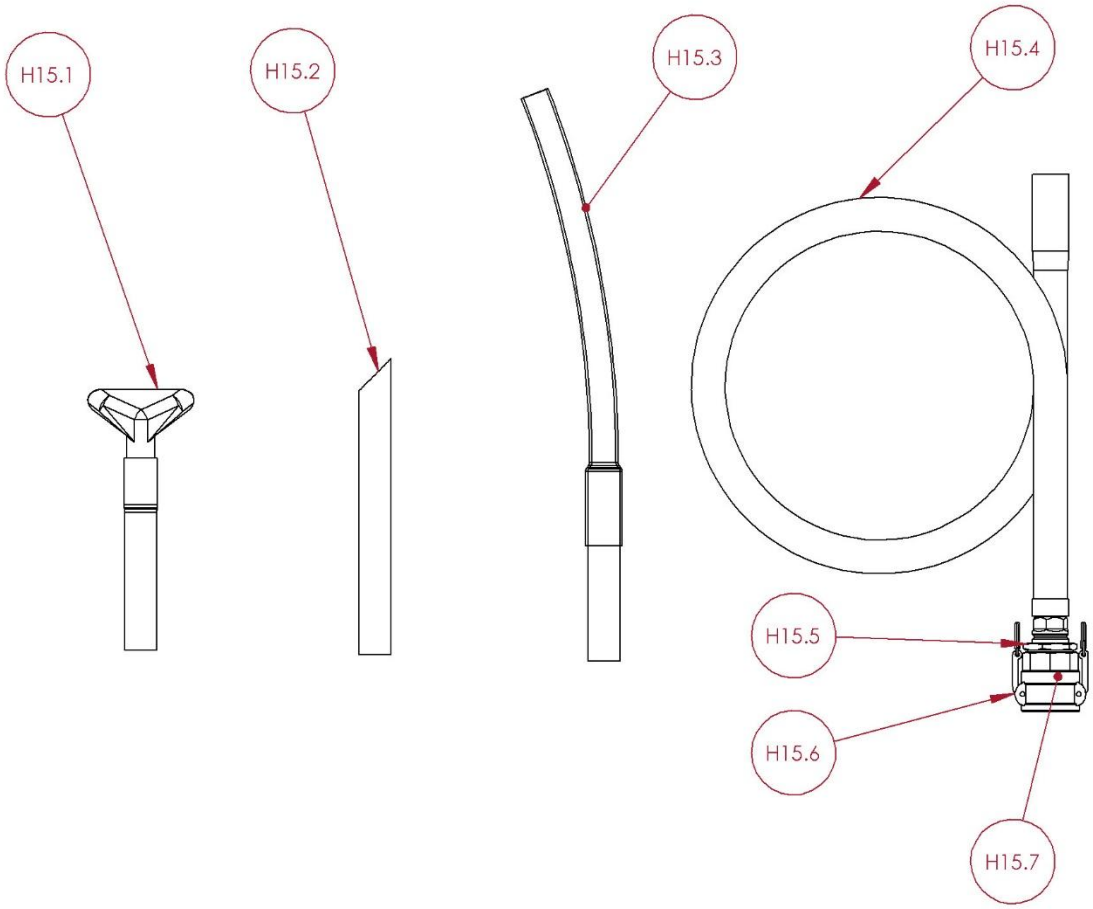

REF	PART NUMBER	DESCRIPTION
H15.1	ASC0.0032	TOOL - NOZZLE ASSEMBLY-FLARE 1-1/2"
H15.2	ADT0.0019	TOOL - NOZZLE - 1¼" STR.
H15.3	ASC0.0033	TOOL - NOZZLE ASSEMBLY-FLEXIBLE 1-1/2"
H15.4	ASC0.0025	HOSE ASSEMBLY - 1½" x 16' - SUMP CLEANER
H15.5	FBG0.2000.1500.0000	BUSHING - REDUCER
H15.6	PPLM.0000.0016.0000	QUICK DISCONNECT COUPLER
H15.7	PGAS.0000.0003.0200	COUPLER GASKET

7.6 – SUMP CLEANER HOSE 2” x 16’ (STANDARD)

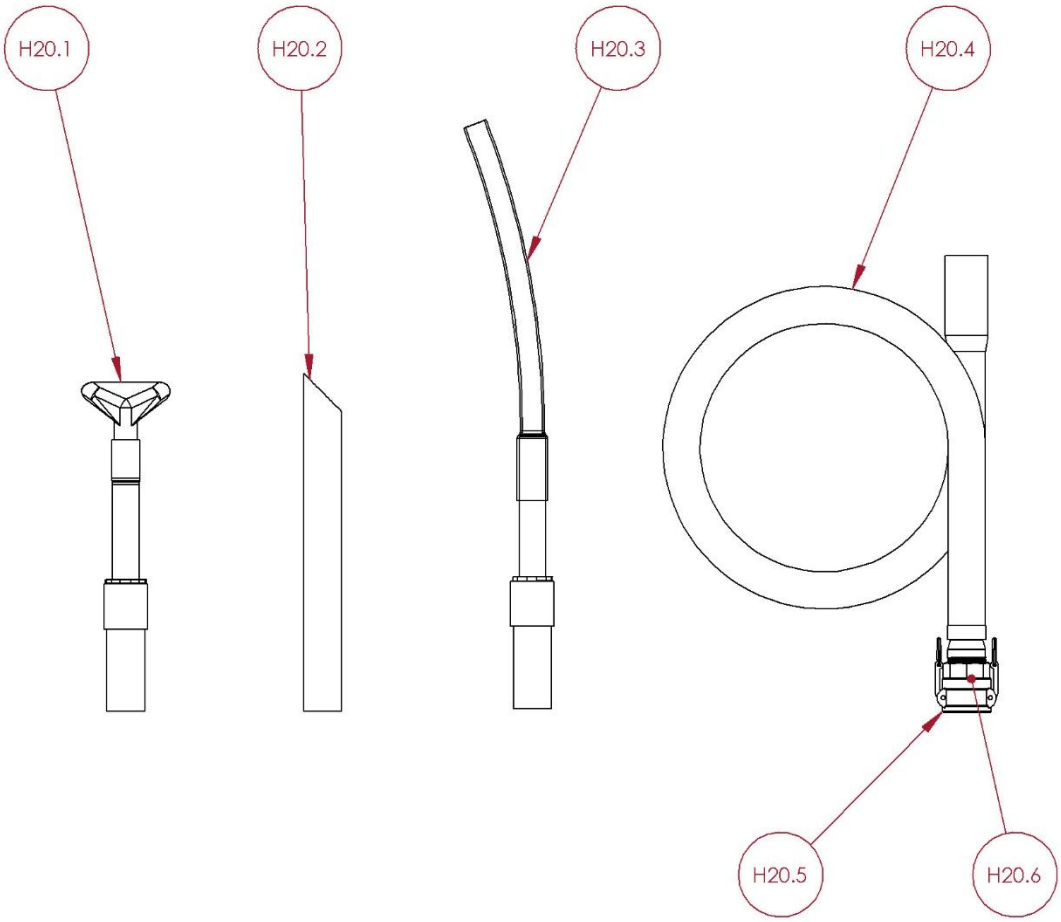

REF	PART NUMBER	DESCRIPTION
H20.1	ASC0.0034	TOOL - FLARED NOZZLE ASSEMBLY, 2" HOSE
H20.2	ADT0.0055	TOOL - STRAIGHT NOZZLE, 2"
H20.3	ASC0.0035	TOOL - FLEXIBLE NOZZLE ASSEMBLY, 2" HOSE
H20.4	ASC0.0030	HOSE ASSEMBLY - 2" x 16' - SUMP CLEANER
H20.5	PPLM.0000.0016.0000	QUICK DISCONNECT COUPLER
H20.6	PGAS.0000.0003.0200	COUPLER GASKET

7.7 – F50 FILTER (STANDARD)

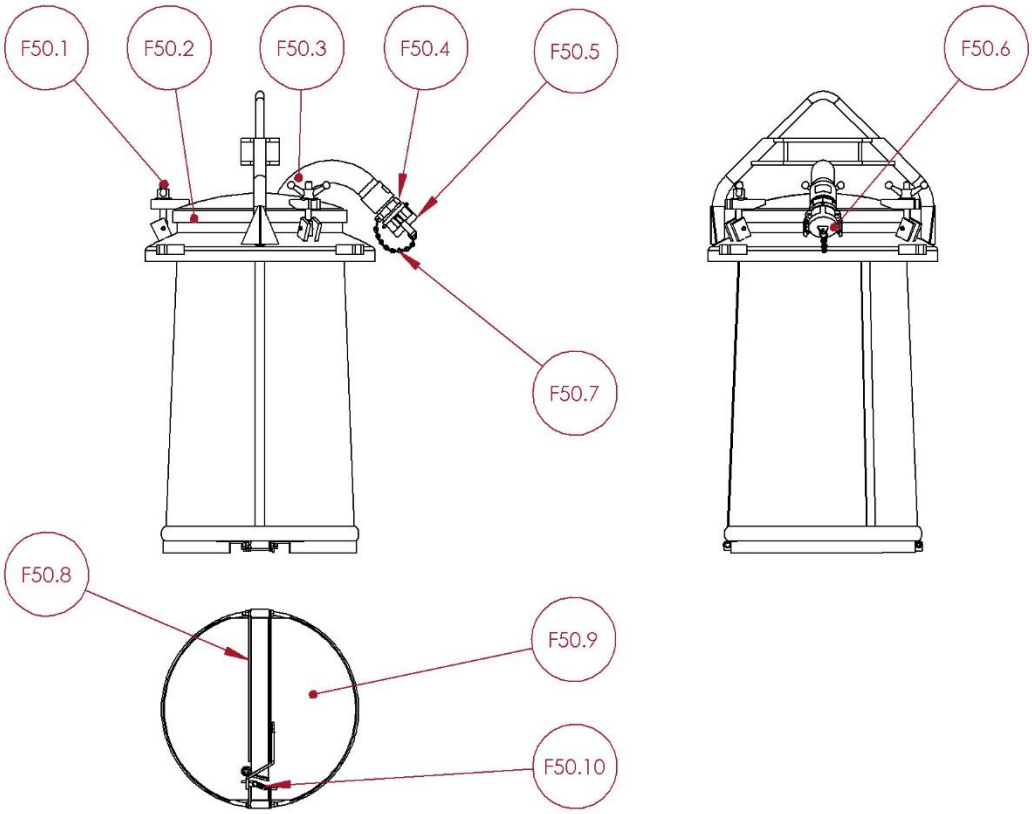

REF	PART NUMBER	DESCRIPTION
F50.1	HN0Z.0625.1100.WING	WING NUT 5/8-11
F50.2	ADT0.0106	FILTER LID GASKET
F50.3	ASC0.0048	FILTER LID ASSEMBLY
F50.4	PPLM.0000.0050.0000	PRESSURE SAFE ADAPTER - 2" - MALE
F50.5	PPLM.0000.0049.0000	CAP - PRESSURE SAFE 2"
F50.6	PGAS.0000.0003.0200	COUPLER GASKET
F50.7	PMIS.0000.0008.0000	CHAIN, SECURITY W/SMALL HOOKS 6"
F50.8	ADT0.0147	LATCH CHANNEL
F50.9	ASC0.0056.A	BOTTOM DOOR ASSEMBLY
F50.10	PFAB.0000.0030.0000	LOCKING SPRING
F50.11	ADT0.0124	F50 FILTER SLEEVE GREEN POLY (NOT SHOWN)
F50.12	ADT0.0214	F50 FILTER SLEEVE COARSE (NOT SHOWN)
F50.13	ADT0.0213	F50 FILTER SLEEVE FINE COTTON (NOT SHOWN)

SECTION 8 – WARRANTY

WARRANTY STATEMENT

PLEASE PRINT OUR WARRANTY AT HTTPS://CECOR.NET/CECOR-WARRANTY/

SECTION 9 – RECORD MODEL & SERIAL NUMBER

WHEN YOU RECEIVE YOUR CECOR SUMP SHARK, RECORD THE MODEL NUMBER, SERIAL NUMBER AND DATE DELIVERED FOR YOUR RECORDS.

MODEL #: _____

SERIAL #: _____

DELIVERED: _____ / _____ / _____

CECOR®

HOME OF THE SUMP SHARK™ THE SLUDGE PREDATOR

www.sumpshark.com